Green Power Solutions

Replacing Copper with high-performance Aluminium alloys

Bruno Passerini - Green Power Solutions

GPS Tech Seminar 2023

Copper trends

- World is moving towards a low carbon energy future
- Key technologies for the energy transition require much more copper than their fossil fuel based counterparts (e.g. the electric motors of EV's do have a lot of copper into their windings, while endotermic engines don't)
- Energy transition is already moving ahead very fast, in spite of the endless controversial debates whether it's right or not
- The copper demand from the energy transition is therefore expected to **increase up to 600%** by 2030 vs. the present demand
- The high-quality copper ores are more and more rare and difficult to discover
- Economy circularity is improving, hence increasing the amount of recycled copper. This virtuous practice, however, is not able to have a significant impact on the demand trend, anyhow always growing at a very fast pace
- All the ingredients for a perfect storm are present

Copper production

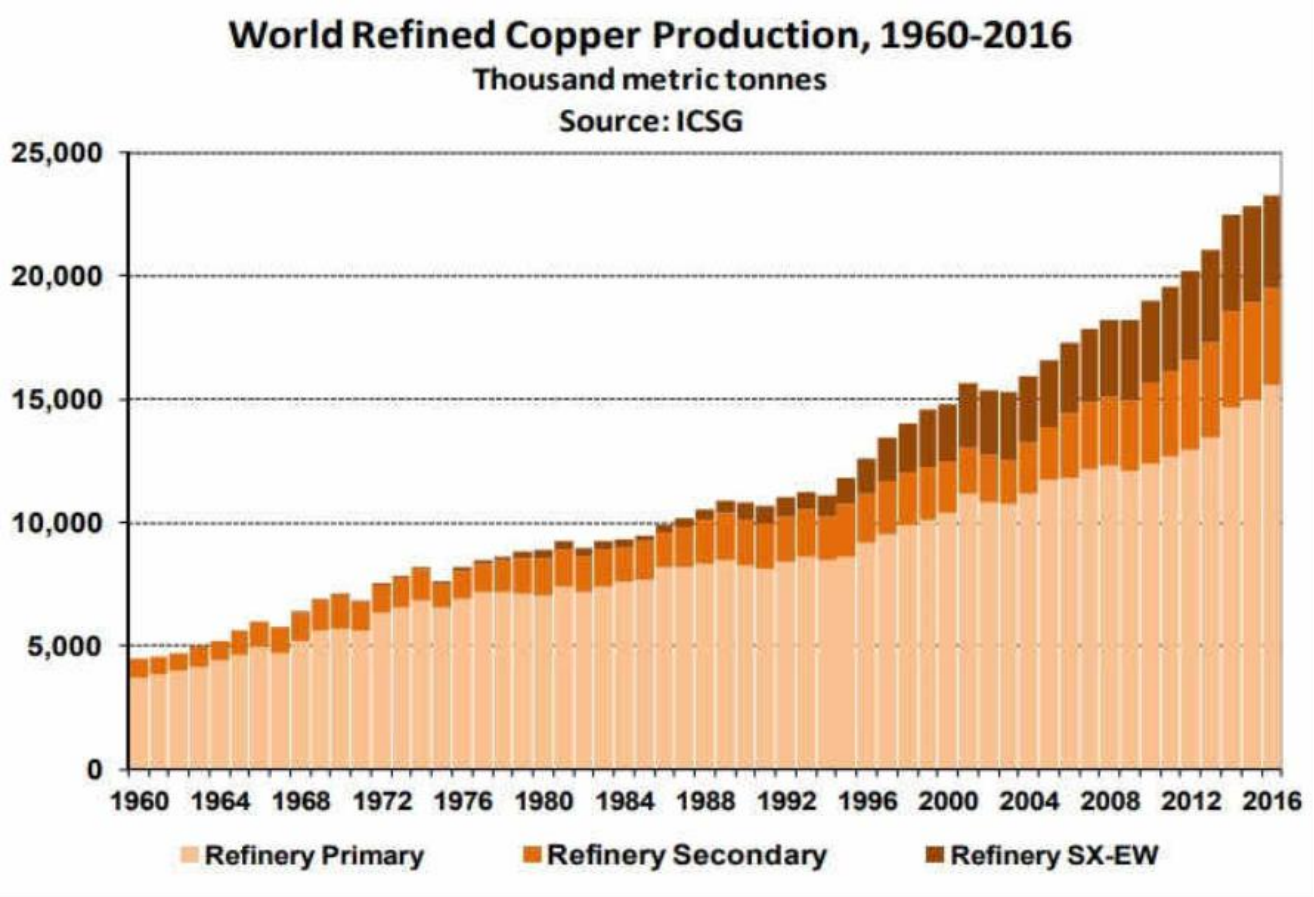

SX-EW is an alternative method of copper production applied to poor oxide ores, with low copper content, as well as some sulphide ores. This method includes leaching (Solvent Extraction, SX) and electrowinning (EW)

Copper production geo distribution

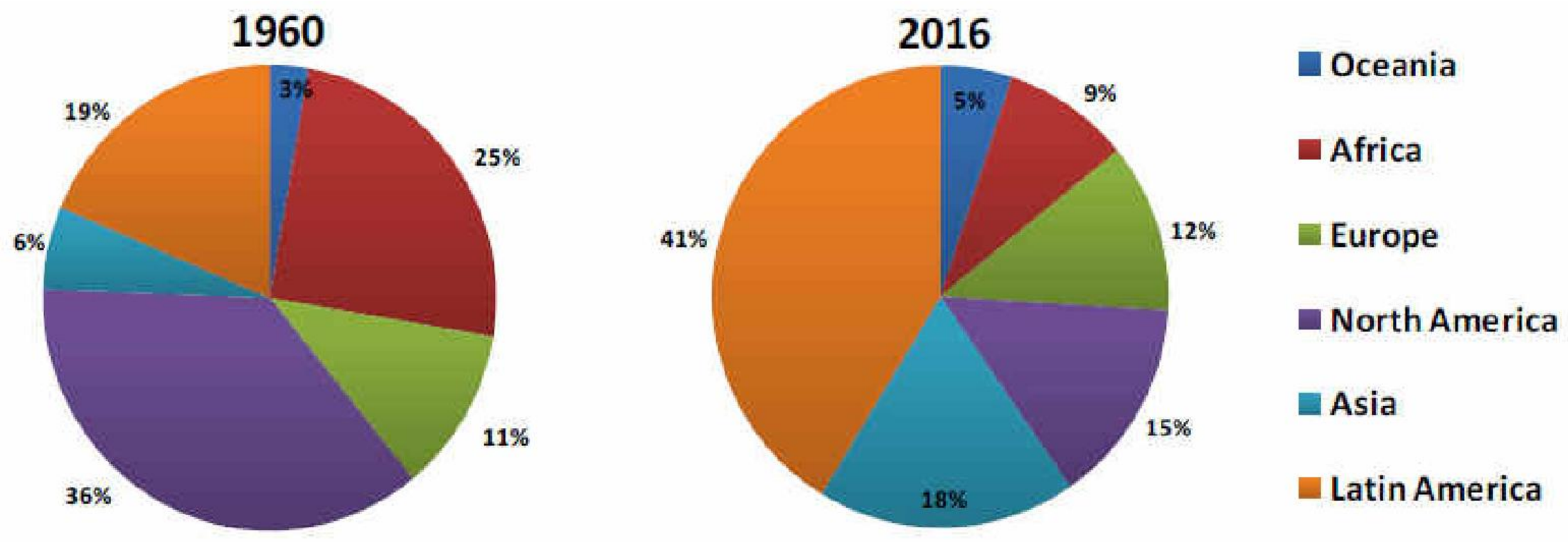

Market price trends

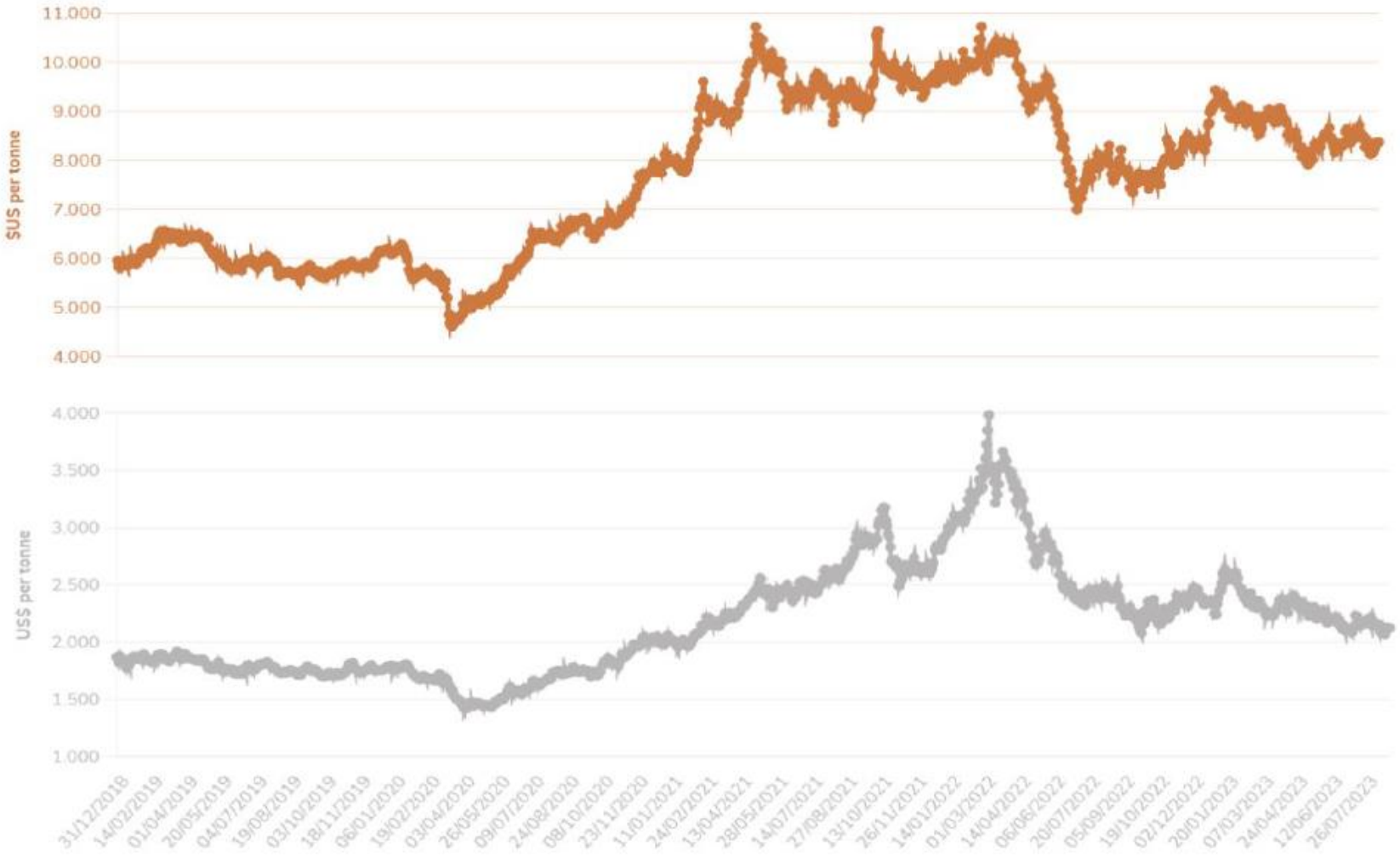

LME Copper price

LME Aluminium price

Key Physical Properties

						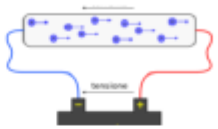	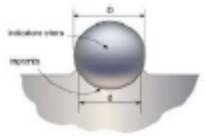	
	Density	Specific heat	Thermal expansion coefficient	Thermal resistivity	Thermal diffusivity	Electrical resistivity	Hardness	Melting point
	γ [kg/m^3]	C [J/kg °C]	CT [°C^{-1}] x 10^{-6}	1/λ [m °C/W] x 10^{-3}	α [mm^2/s]	ρ [Ω m] x 10^{-8}	HB	[°C]
Cu	8930	385	17	2.6	113	1.7	35	1085
Brass	8470	376	20	8.3	38	6.4	60-120	930
Al(loy)	2700	897	23	4.2	98	2.7	70	660

Brass-free box clamps: Project targets & constraints

- **Targets:**
  - Nickel-plated brass top terminals replaced by aluminum ones
  - New Al top terminals must be passivated
  - Reduced total mass
  - Broader choice of top Al terminal types
  - Low profile types
  - Retarded differentiation / Possible aftermarket modifications
  - Reduced leadtime
  - No-drop design
  - Choice of new mounting accessories aimed to reduce the part count
  - Mounting tools
  - Easier mounting process and field maintenance

- **Constraints:**
  - Same (or lower) impedance (electrical and thermal) associated to the new top terminals
  - Same outline (or just very little height variation)
  - Same (or higher) ruggedness and long term reliability

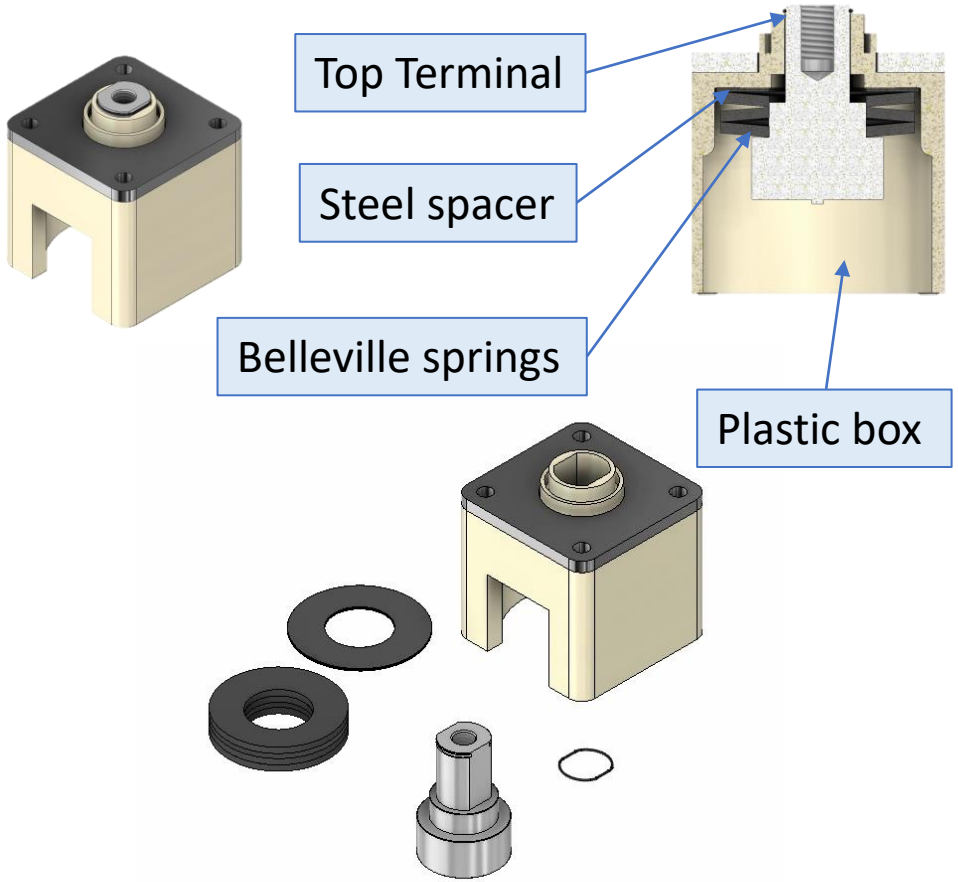

New Brass-Free Box Clamps: Key Achievements

- Lower total mass (about **– 68 %**)
- Lower thermal resistance (around **- 62 %**)
- Lower electrical resistance (around **- 61%**)
- **12 types** of new top terminals
- **Low profile** types (side bar, also with captive nuts)
- **New accessories** (nuts with captive springs, screws with captive washers, ...)
- **Tools** to allow the assembly/disassembly in tight space
- **No-Drop** construction
- More user friendly mounting and field maintenance

New Brass-Free Box Clamps: Module Improvements

- Lower total mass, just considering the lower masses of box clamps:
  - **TEB01: - 5 %**
  - **TEB02: - 4 %**
  - **TEB05: - 6%**
  - **TEB10: - 6%**
  - **TEB20: - 2%**
  - **TEB30: - 5%**
- The reduction of thermal resistance due to the lower thermal resistance of the top terminals translates into a neglectable current rating advantage, worth just a few Amps
- Lower electrical resistance (**-61 %)**

All Aluminum Assembly (AAA) TEB05/10 Modules Project Targets & Constraints

- **Targets:**
  - Nickel-plated copper busbars replaced by aluminum ones
  - New Al busbars must be passivated
  - Reduced total mass
  - Use of all UL filed fuses (AC and DC)
  - Increase current output thanks to 2 x 500 A DC fuses in parallel instead of one
  - DC fuses rotated 90° for sake of easier monting in the cabinet
  - Aluminum box clamps with no-drop design
  - Easier mounting process and field maintenance

- **Constraints:**
  - Same overall max dimensions
  - Improved current rating
  - Same (or higher) ruggedness and long term reliability

All Aluminum Assembly (AAA) TEB05/10 Modules Project Achievements

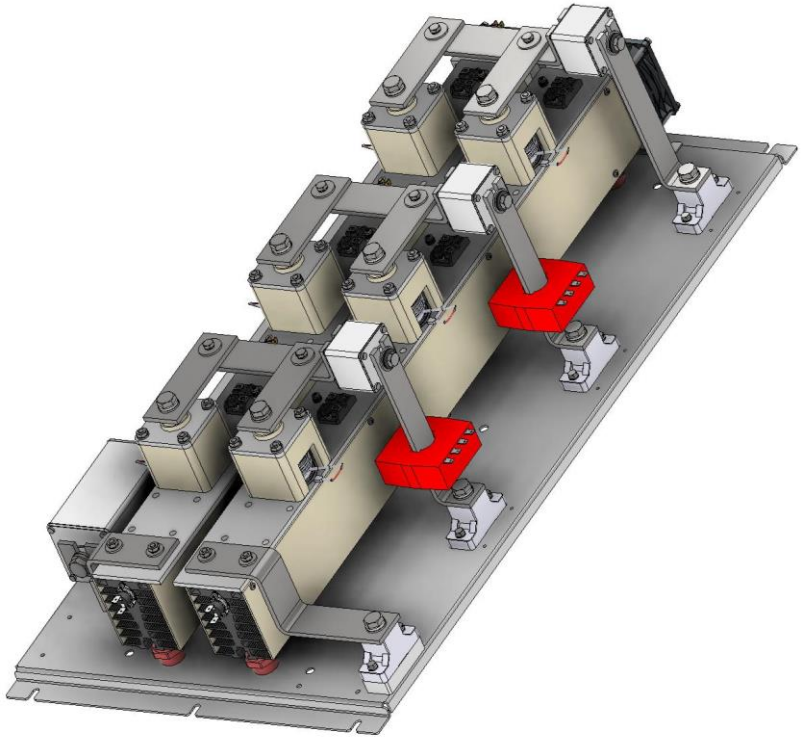

Old TEB10 design

- Total weight reduction: **- 5 % (40.5 kg vs. 42.5 kg)**
- Improved DC fuse:
  - Higher user friendliness design (easier connection to the DC lead and easier fuse maintenance)
  - **UL listed fuses**
  - **2 x 500 A UL fuses** vs. a single non-UL 500 A fuse
- Pin-to-Pin compatibility with old TEB05/10 modules

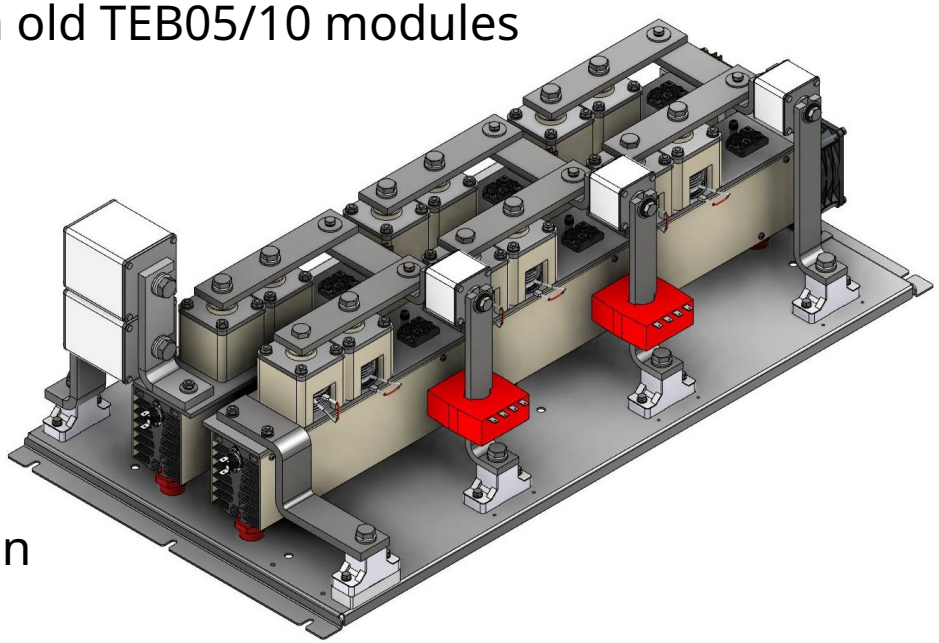

New TEB10 AAA design

All Aluminum Assembly (AAA) TEC20 Modules
Project Targets & Constraints

- **Targets:**
  - Nickel-plated copper busbars and heatsinks replaced by aluminum ones
  - New Al busbars and heatsinks must be passivated
  - Reduced total mass
  - More user friendly cabinet mounting
  - Lower MTTR (Medium Time To Repair)
  - Reduced design constraints for future developments
  - Reduced part count
  - Same (or higher) ruggedness and long term reliability

- **Constraints:**
  - Same overall dimensions vs. TEC20 modules
  - Pin-To-Pin compatibility
  - Almost same current carrying capability

All Aluminum Assembly (AAA) TEC20 Modules Key Design Steps

- Standard aluminum alloys compare unfavorably with copper
- Busbars are larger and are made of a new Al alloy with higher electrical conducibility
- The design of new Al heatsinks requires a more mind-bending complexity:
  - The lower thermal conducibility of aluminum is partially compensated by the higher surface exposed to the air flow
  - The special alloy used for the new aluminum heatsinks has better thermal exchange performances
  - The new aluminum heatsinks allow higher design freedom: the nickel plated ones are made using punching tools, therefore their dimensions are fixed. The aluminum ones can be made as needed without major constraints
  - This allows using SCR's with larger dimensions, hence with higher current carrying acpability and – most important – higher i^2t
  - Therefore fuses with higher current (but still able to protect the SCR's) can be used
- More user friendly cabinet mounting
- Lower MTTR (Medium Time To Repair)
- Reduced design constraints for future developments
- Reduced part count
- Same (or higher) ruggedness and long term reliability

All Aluminum Assembly (AAA) TEC22A Modules Project Achievements vs. TEC20 Modules

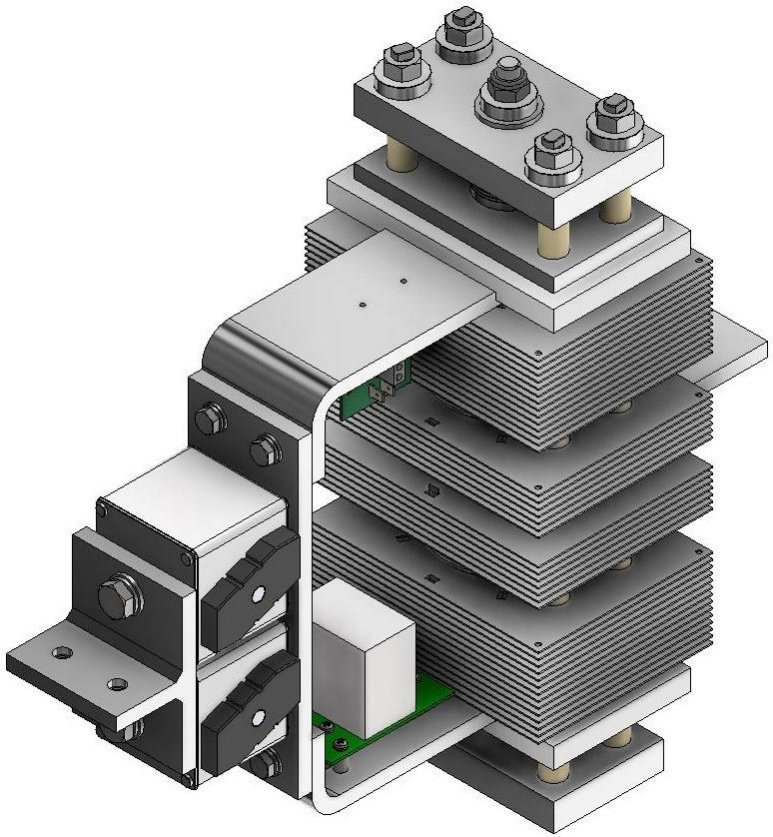

Old TEC20 design

- Same overall max dimensions
  Pin-to-Pin compatibility
  Total weight reduction: **-27% (19.5 kg vs. 26.65 kg)**
  Improved snubber resistor:
  - **1 x 250 W** vs. 2 x 100 W
  - Lower part count
  - Lower working temperature
  Improved fuses:
  - More user friendly design
  - **UL listed fuses**
  Improved current performances:
  - **$I_{F(AV)}$ = 3730 A vs. 3050 A (+22%)** *
  - **I_{TSM} = 60 kA vs. 45 kA (+33%)**

New TEC22A design

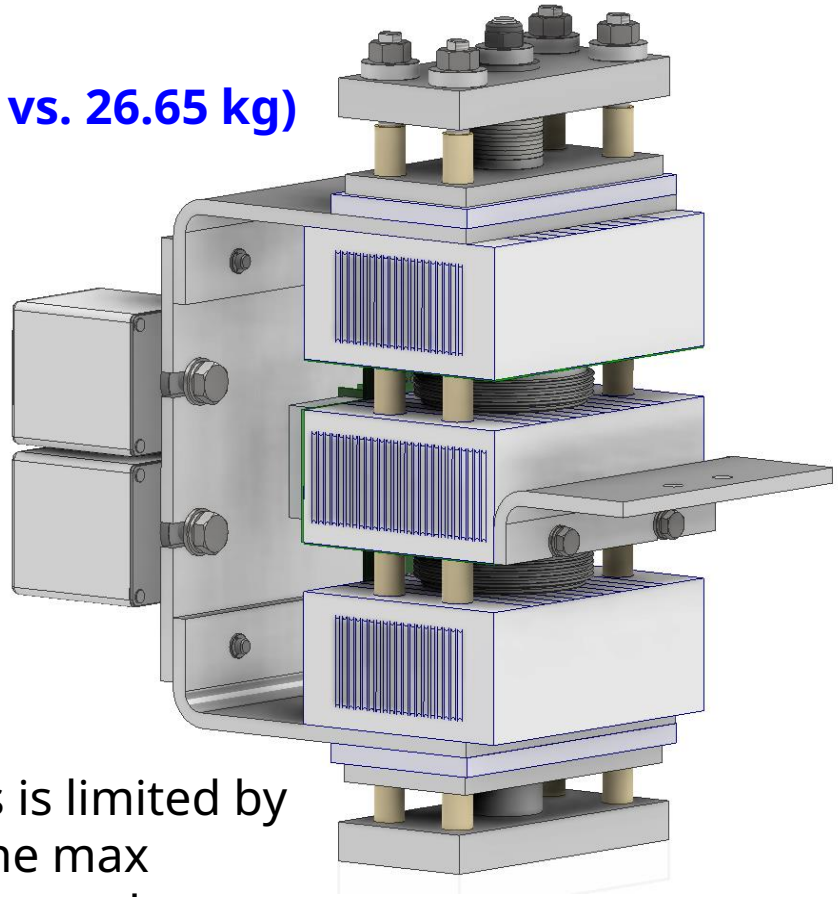

(*) The output current of both bridges is limited by the I^2t of the fuses. This determines the max allowable I_{RMS} of the single module, hence the output current $I_{F(AV)}$ of the bridge

All Aluminum Assembly (AAA) TEC19A modules
Project achievements vs. the TEC20

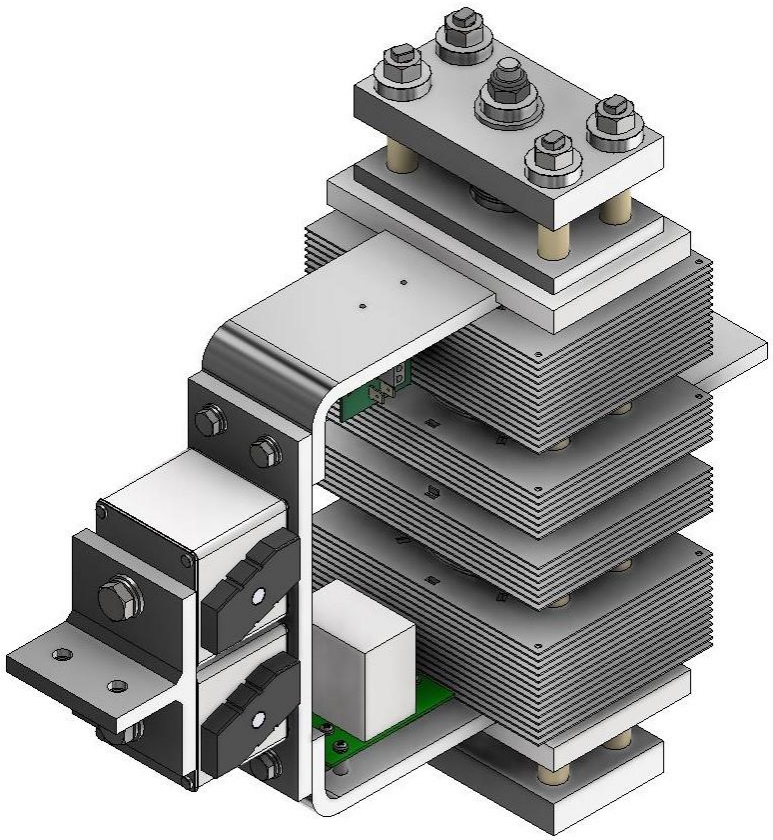

Old TEC20 module

- Besides the new TEC22A modules, this project gave birth to the new TEC19A module, which has the same outline of the mighter TEC22A
  Pin-to-Pin compatibility with TEC22A
  Lower weight vs. TEC22A (due to the smaller SCR puks and to the single fuse design):
  -30% (18.7 kg vs. 26.65 kg)
  Improved snubber resistor:
  - **1 x 250 W** vs. 2 x 100 W
  - Lower part count
  - Lower working temperature

  Improved fuses:
  - More user friendly design
  - UL listed fuses

  Excellent current capabilities, thanks to the good match SCR-heatsink:
  - **$I_{F(AV)}$ = 2750 A** (the much heavier TEC20 yields just 23% more current: 3390 A)
  - I_{TSM} = 36 kA for the 1800 V SCR
  - I_{TSM} = 30 kA for the 2200 V SCR

New TEC19A module

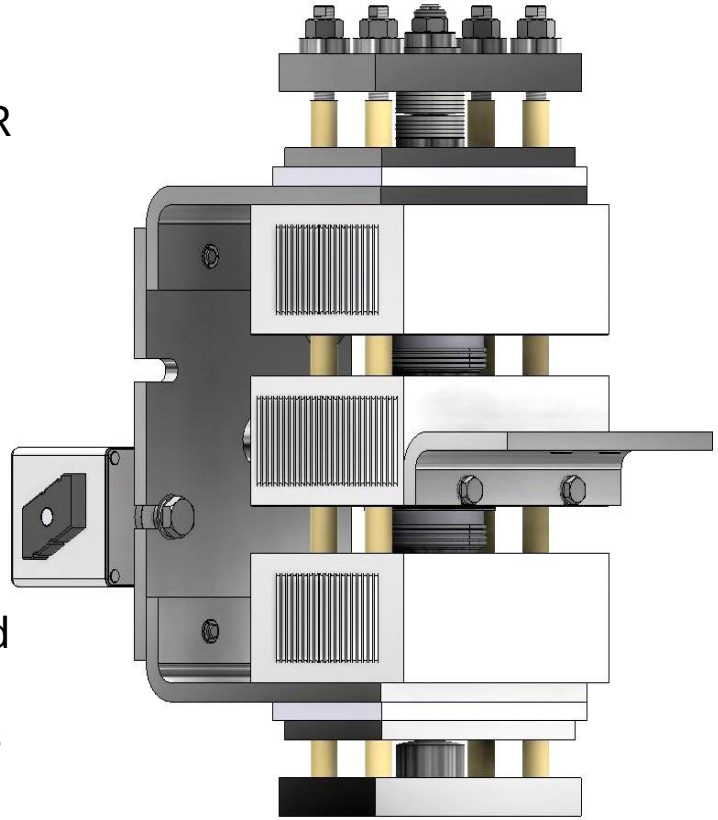

Next steps

- **TEC30A – Low Voltage version**
  - Line Voltage up to **930 V_{RMS}**
  - Output current (three phase regen bridge) up to **5765 A** (IEC Cl.1, 8.5 m/s air speed, 1000 m a.s.l.)
  - Fully insulated bar clamp with **F = 90 kN** nominal clamping force
  - Total mass (without the antiparallel bar with fuses): **29.5 kg**

- **TEC30A – Medium Voltage version**
  - Line Voltage up to **1200 V_{RMS}**
  - Output current (three phase regen bridge) up to **4585 A** (IEC Cl.1, 8.5 m/s air speed, 1000 m a.s.l.)
  - Fully insulated bar clamp with **F = 90 kN** nominal clamping force
  - Total mass (without the antiparallel bar with fuses): **29.5 kg**

TECA161A-36-R

TEC30A – Key design features

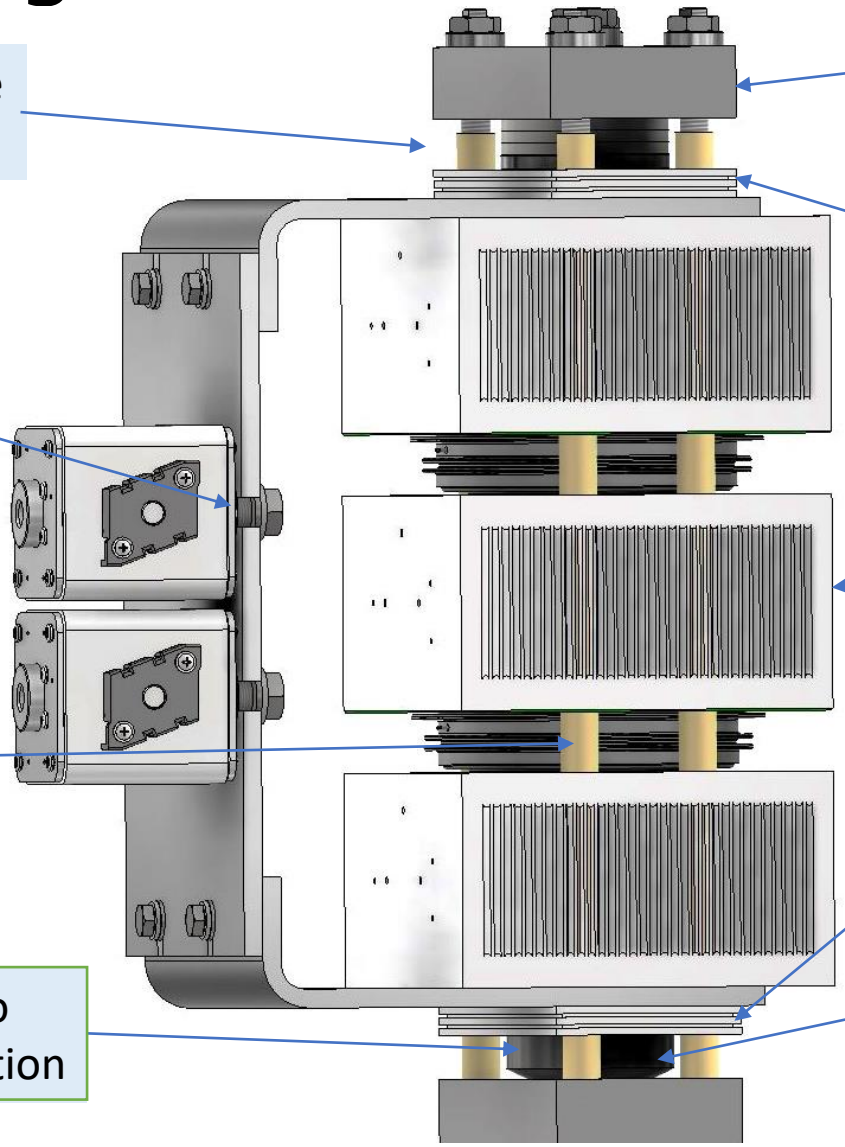

Load bar with single spring pack

Load bar with 90 kN nominal clamp force

G11 insulating layer with side grooves for improved creepage distance

Antiparallel bus bar with side open slots for sake of MTTR minimization

Aluminum heatsinks with improved efficiency

Threaded rods made of stainless steel to reduce parasitic currents

Fully insulated bar clamp

Reverse pivot with induction heating hardened surface

Large diameter pivot aimed to achieve an even load distribution

Regen Bridge Made with Six TEC30A Modules

4600 A @ 1.2 kV_{RMS} (T_a = 40 °C, IEC Cl1)

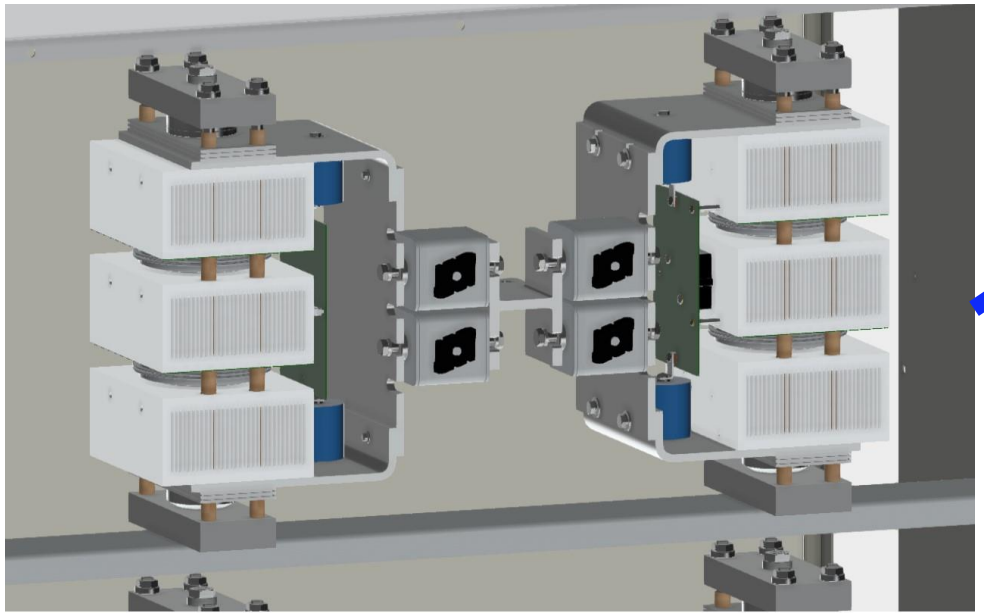

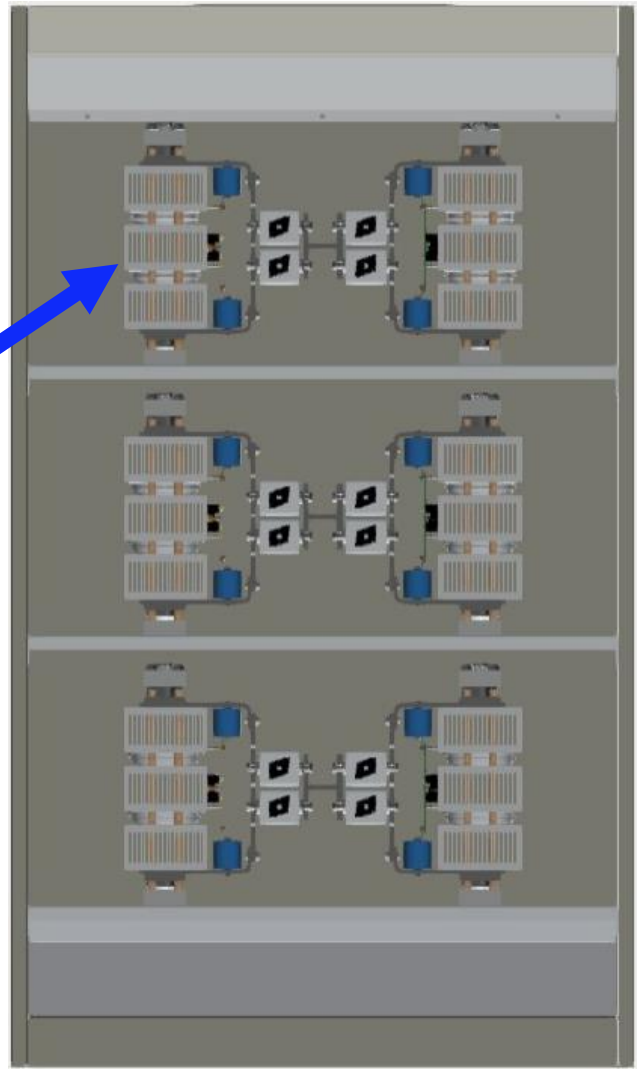

CONCLUSIONS

- Four years ago it was launched an ambitious project: replacing as much as possible all the copper / copper alloy parts of our power modules and box clamps
- That decision was based on the ever growing market price of copper and on the booming demand of this metal, very scarce on the Earth crust, a dreadful combination able to jeopardize our business
- The redesign of box clamps revealed a lot of unexpected side advantages. Not only the aluminum perfectly replaced the nickel-plated brass, but the are better in every respect (thermal and electrical conducibility)
- The redesign of TEB05 / 10 modules (now AAA – All Aluminum Assembly) was also successfully completed with some extra side advantage (e.g. more user friendly DC fuses)
- The TEB20 and TEB30 modules enjoyed (will enjoy) the new aluminum box clamps for sake of a significant reduction of the total mass
- The redesign of TEC20 modules was indeed the most challenging task, *thanks* to the «almost impossible» design constraints imposed by Rommel: the new aluminum modules had to be pin-to-pin compatible with the TEC20 ones, nonetheless achieving the same current perfomances. In the end the new TEC22A modules yielded even better current ratings vs. the old TEC20 ones. This hard to believe result was a combination of higher aluminum surface exposed to the cooling air and the ability to use larger SCR's with higher i^2t. This allowed the use of extrarapid fuses with 22% higher average current, but still able to protect the SCR's. Some luck, once in a while …

CONCLUSIONS *(cont'd)*

- Three months ago, eventually, we decided to use the new AAA approach to design something brand new: two mighty modules able to make regen motor drives with single parallel solution
- The design goals were:
  - LV drive, with line voltage up to 930 V_{RMS} (i.e. 2800 V PIV SCR's) and output current in excess of A
  - MV drive, with line voltage up to 1200 V_{RMS} (i.e. 3600 V PIV SCR's) and output current in excess of 3500 A
- The design constraints were:
  - Extrarapid fuses able to clear the fault while protecting the SCR's
  - Total mass within the max allowable limit for a single worker
  - MTTR lower that 30 min since when the faulty modules have been identified
- As shown here below the new TEC30A modules are meeting all the above targets & design constraints putting us ahead of the crowd

TECA161A-36
3600 V SCR's
4585 A bridge DC current

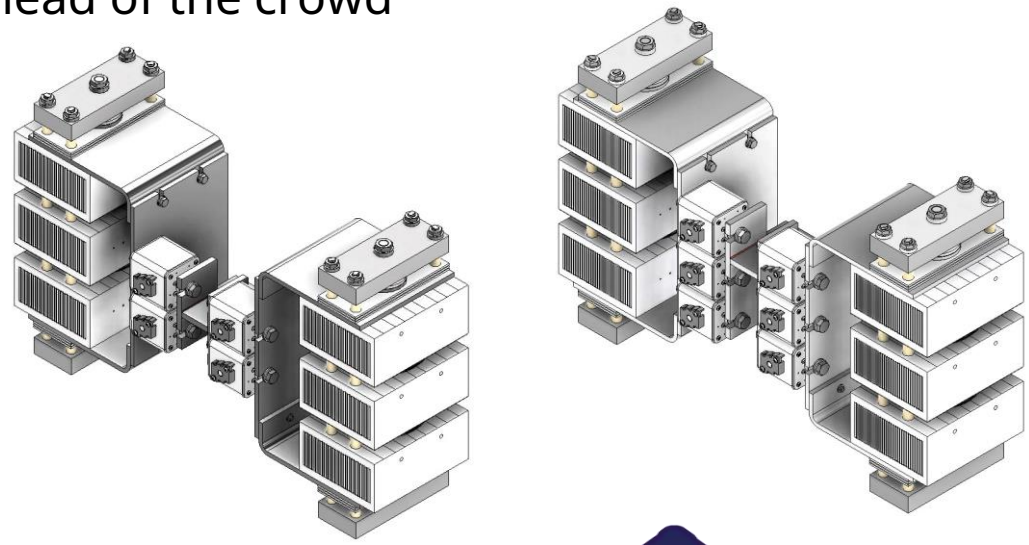

TECA201A-28
2800 V SCR's
5765 A bridge DC current

Thanks for your attention!

Bruno Passerini
bruno.passerini@gpsemi.it
www.gpsemi.it