Green Power Solutions

Digi CYC

Jorge Eduardo Haros Villanueva – AMI Automation

GPS Tech Seminar 2023

Agenda

- What is a cycloconverter
- Compare cycloconverters with PWM equipment
- Types of cycloconverters.
- DigiCYC Hardware
- DigiCYC functions

What is a Cycloconverter???

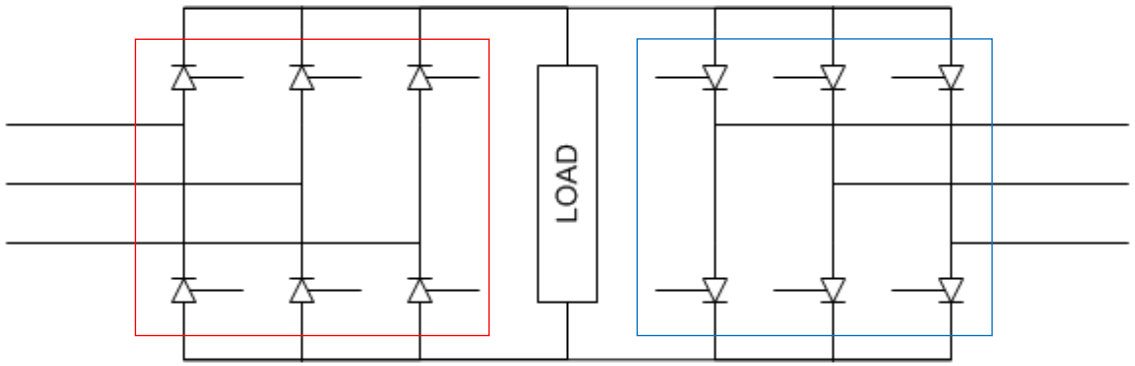

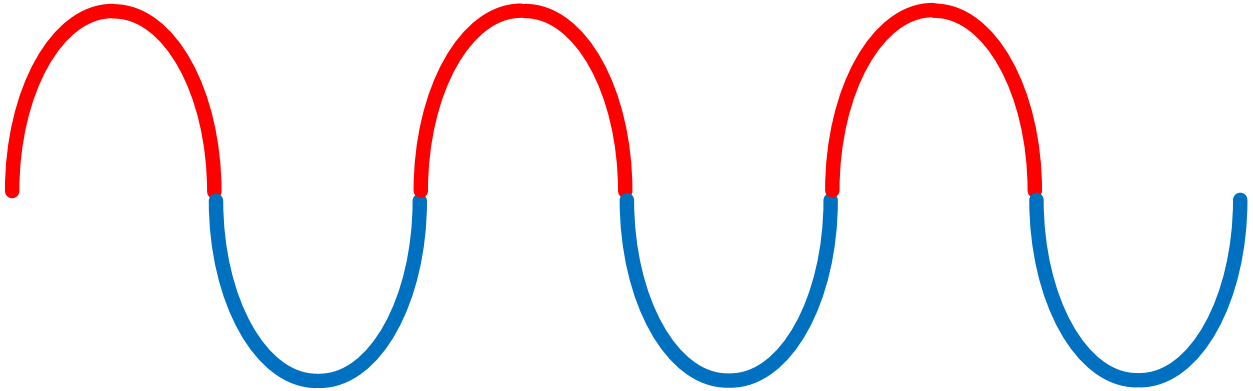

Power electronic driven device that converts from AC to AC at a lower frequency

- 80's 90's technology (now "obsolete")
- 1ph / 3ph
- 6 pulse / 12 pulse parallel / 12 pulse series / others
- Circulating / Noncirculating current
- Highest Frequency → 1/2 AC line Freq
- Retrofitting a Cycloconverter is low-cost option to maintain a good operation.

What is a Cycloconverter???

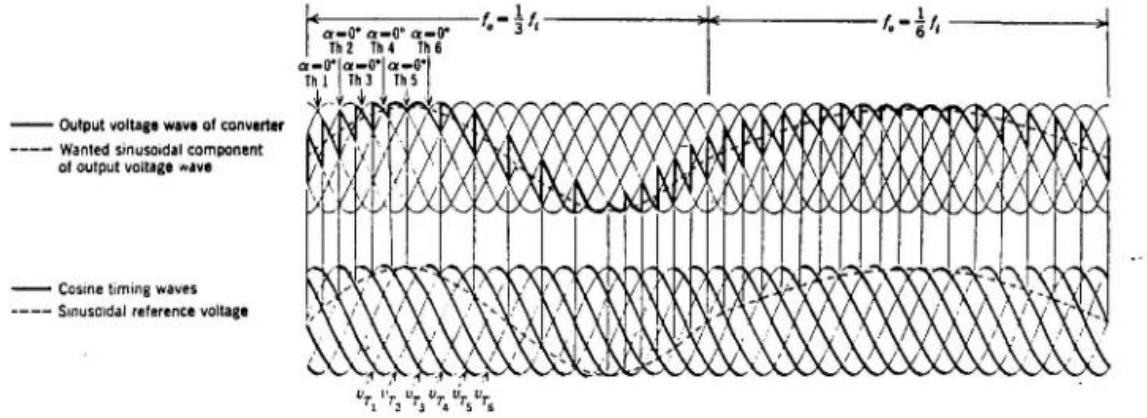

(a) 100% 'Modulation'

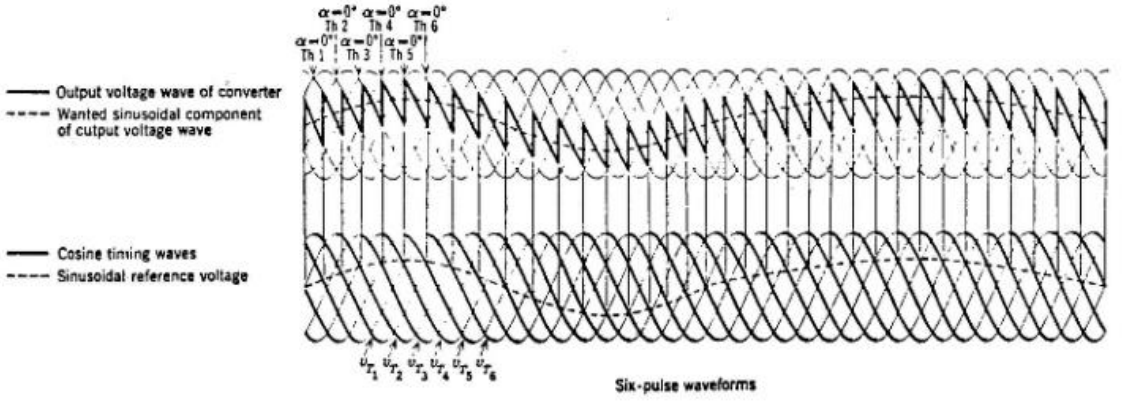

(b) 50% 'Modulation'

DigiCYC Applications

Why is important if is obsolete ?!?!?!?!?!

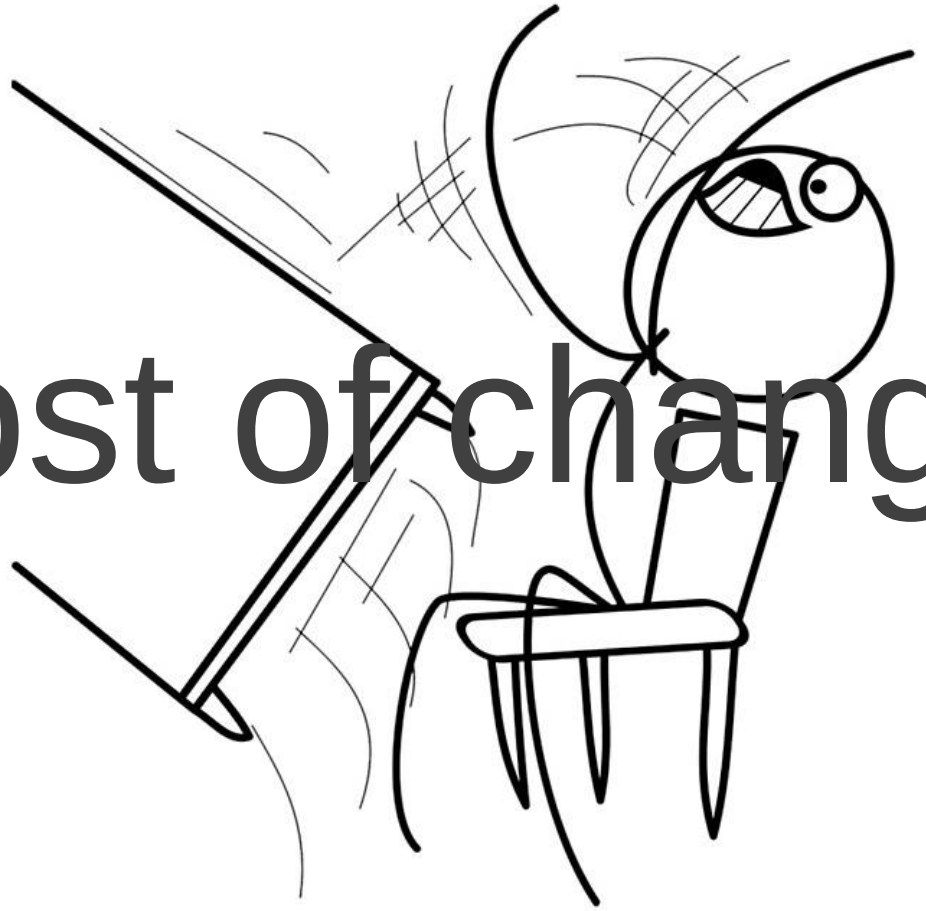

Cost of change!!!!!

DigiCYC is designed to upgrade and update an existing cycloconverter by doing a FCR solution (New CCV is also available)

- F – Firing
- C – Circuit
- R – Replacement.

The FCR is a surgical replacement of the controls of a drive system consisting of a tailor design to fully satisfy the needs of the application.

The FCR consists of leaving the existing power bridges, Transformers and reactors, remove the old control boards, and replace them with the latest technology control system.

Digi CYC

Benefits of installing a DigiCYC:

- Lower Cost
- No need civil installation
- No water installation
- Reduce downtime
- Pre installation on previous outages if needed.
- Reduce Training Costs (The power equipment will remain)
- Guaranteed Performance.
- Enhanced Diagnostics

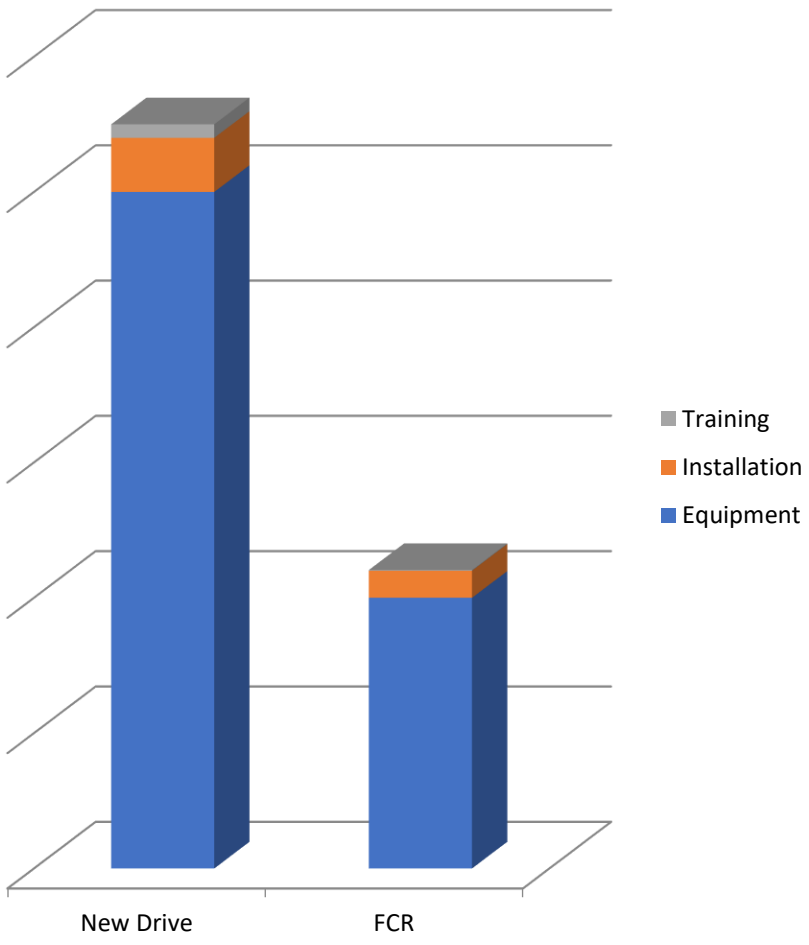

Why DigiFCR?

- Returns the reliability to the operation.
- If the power equipment is in good condition, gives the same performance level as a brand-new equipment.
- Brings your equipment to the latest technology in control and diagnostics of your drive.
- Best ROI (Return of investment)

CYCLOCONVERTER VS PWM DRIVE

CONCEPT	CYCLOCONVER	PWM
Efficiency	99%	96%
Technology	SCRs can be replaceable.	PWM semiconductor technology become obsolete fast.
Common Cooling system	Air Cooling	Water / Air
Performance	Higher recommended frequency is 50% of the incoming frequency. (using 12 pulse circulating current CCV)	Faster Correction Work at higher frequencies.
Incoming Power Factor	Limited correction when using circulating current CCV. External Correction needed.	.98-1
Infrastructure	High Speed Circuit Breakers needed	No need of Output Breakers.

CYCLOCONVERTER VS PWM DRIVE

CONCEPT	CYCLOCONVER	PWM
Maintainability	Field Repairable	Not always field repairable.
Long term support	For ever!!!!	Questionable
Motor Voltage	Same structure, lower voltages	Fixed Motor Voltage.

CONCEPT	
Cost of change from Cycloconverter to PWM (Ex. rolling mill)	-New transformer -Get rid of reactors. -water hoses for cooling down. -high speed circuit breakers.
Current Response	PWM faster than Cycloconverter.

Types of Cycloconverters.

NON CIRCULATING CURRENT

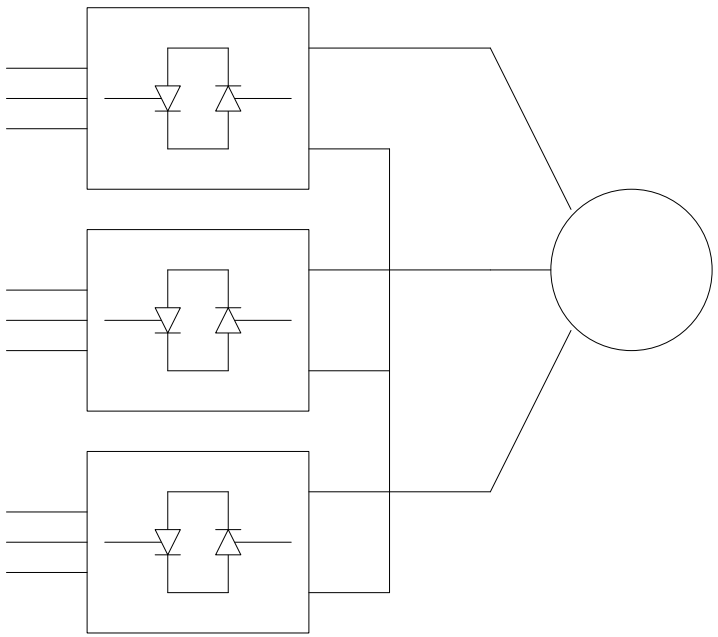

CIRCULATING CURRENT

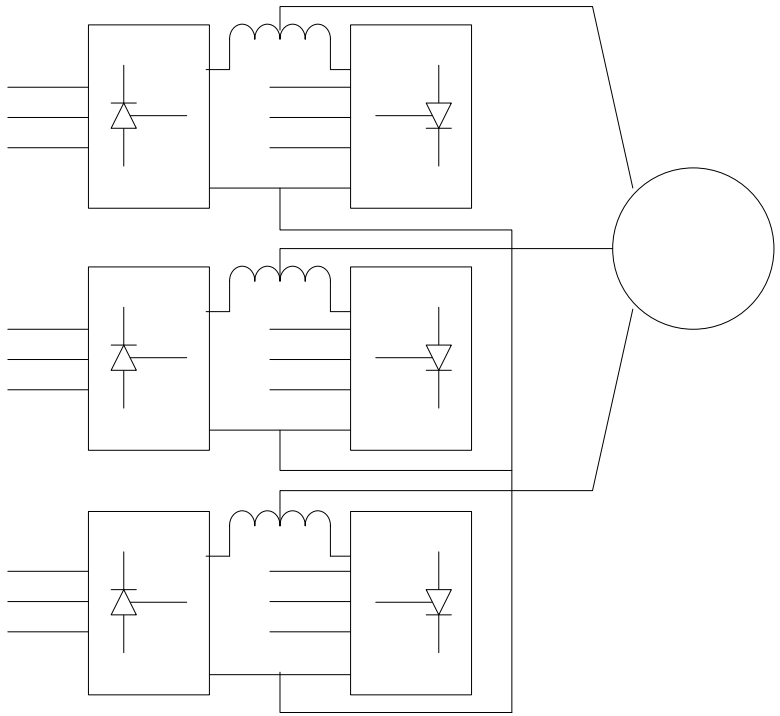

DigiCYC

NON CIRUCLATING CURRENT

- Less Real State
- Complicated Cross Over Logic
- 6 / 12 / 18 / 24 pulse configuration

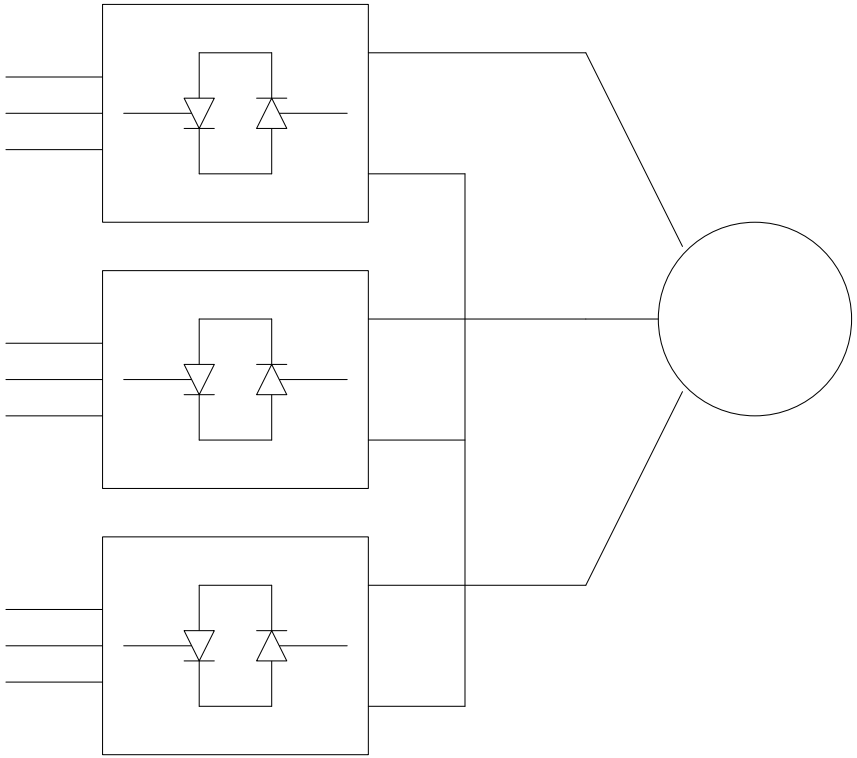

DigiCYC NonCirculating Current

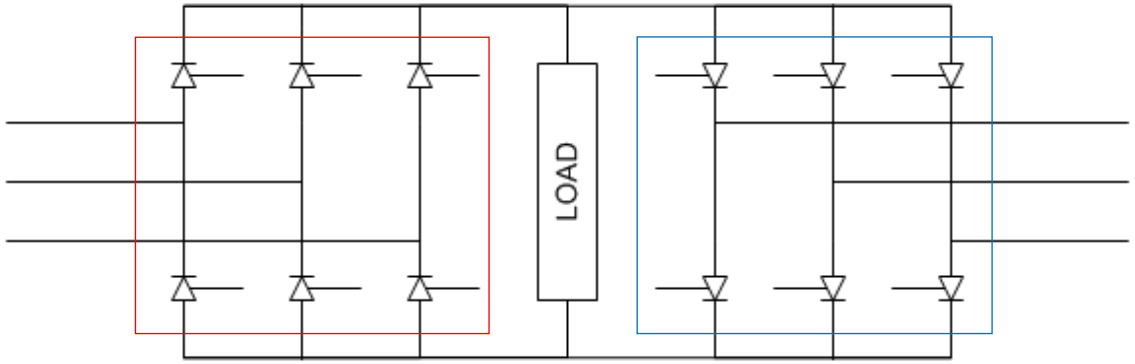

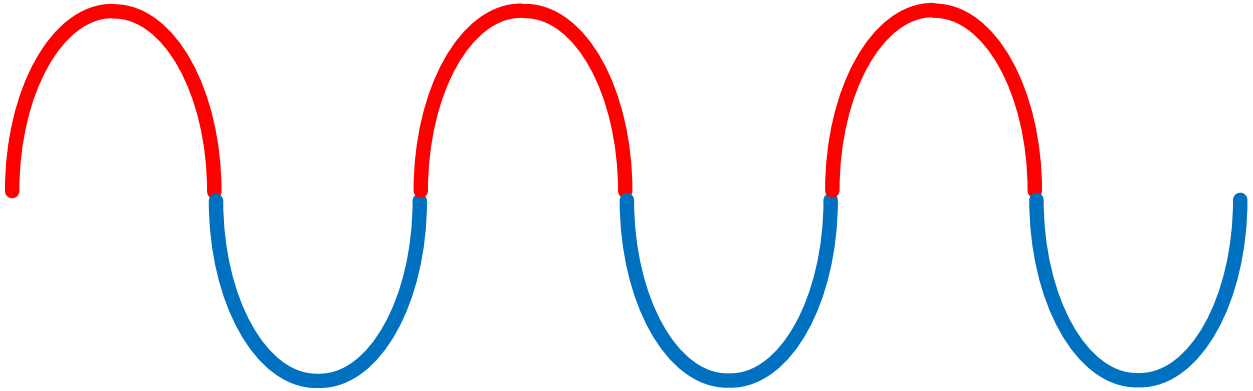

- Important to shut down one bridge before conducting with the opposite. If not, there is a big possibility of having commutation failures.

DigiCYC

CIRCULATING CURRENT

- Large Real State needed due to Reactors and separated Bridges.
- NO Cross Over Logic needed.
- Circulating Current Regulator
- 6 / 12 / 18 / 24 pulse configuration
- Circulating Current allows to generate a higher frequency

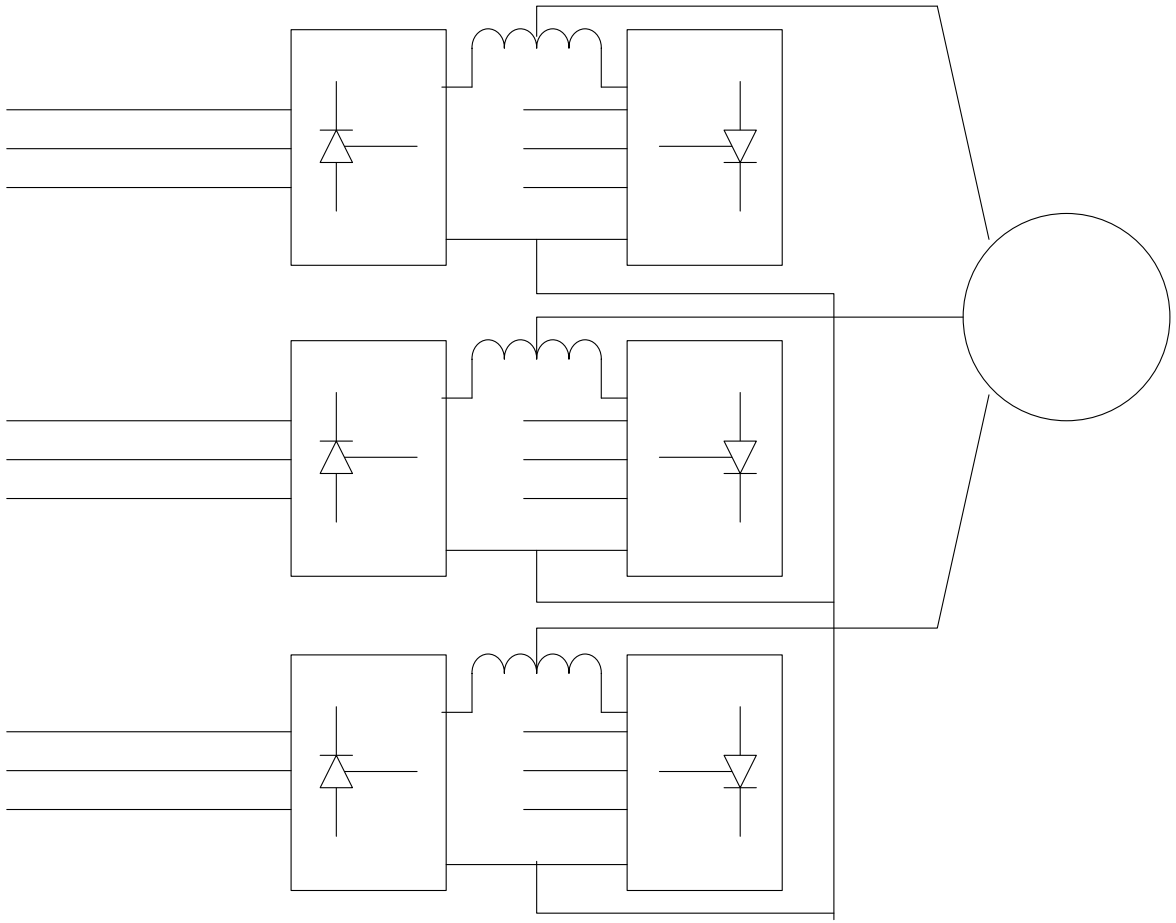

DigiCYC

CIRCULATING CURRENT

- Large Real State needed due to Reactors and separated Bridges.
- NO Cross Over Logic needed.
- Circulating Current Regulator
- 6 / 12 / 18 / 24 pulse configuration
- Circulating Current allows to generate a higher frequency

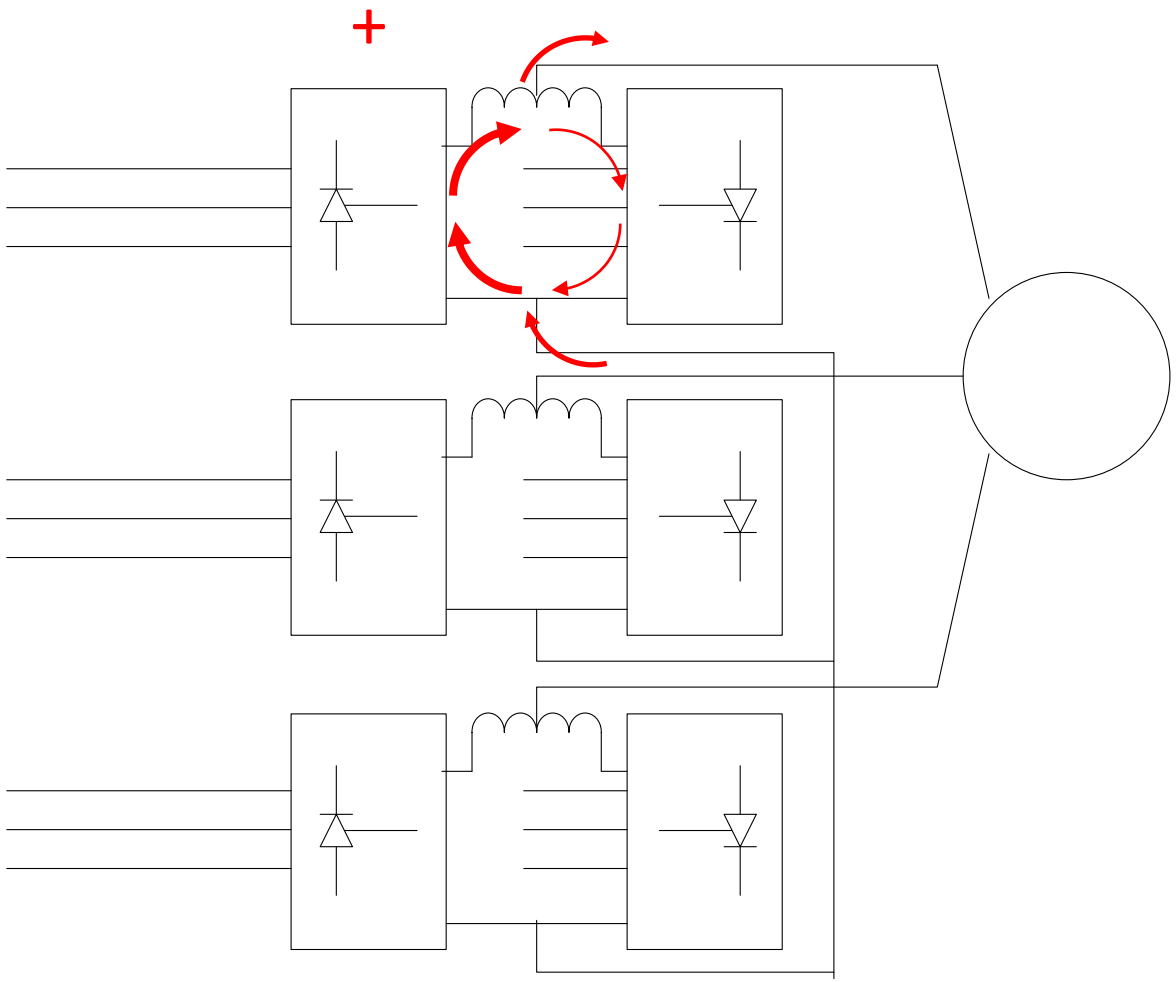

DigiCYC

CIRCULATING CURRENT

- Large Real State needed due to Reactors and separated Bridges.
- NO Cross Over Logic needed.
- Circulating Current Regulator
- 6 / 12 / 18 / 24 pulse configuration
- Circulating Current allows to generate a higher frequency

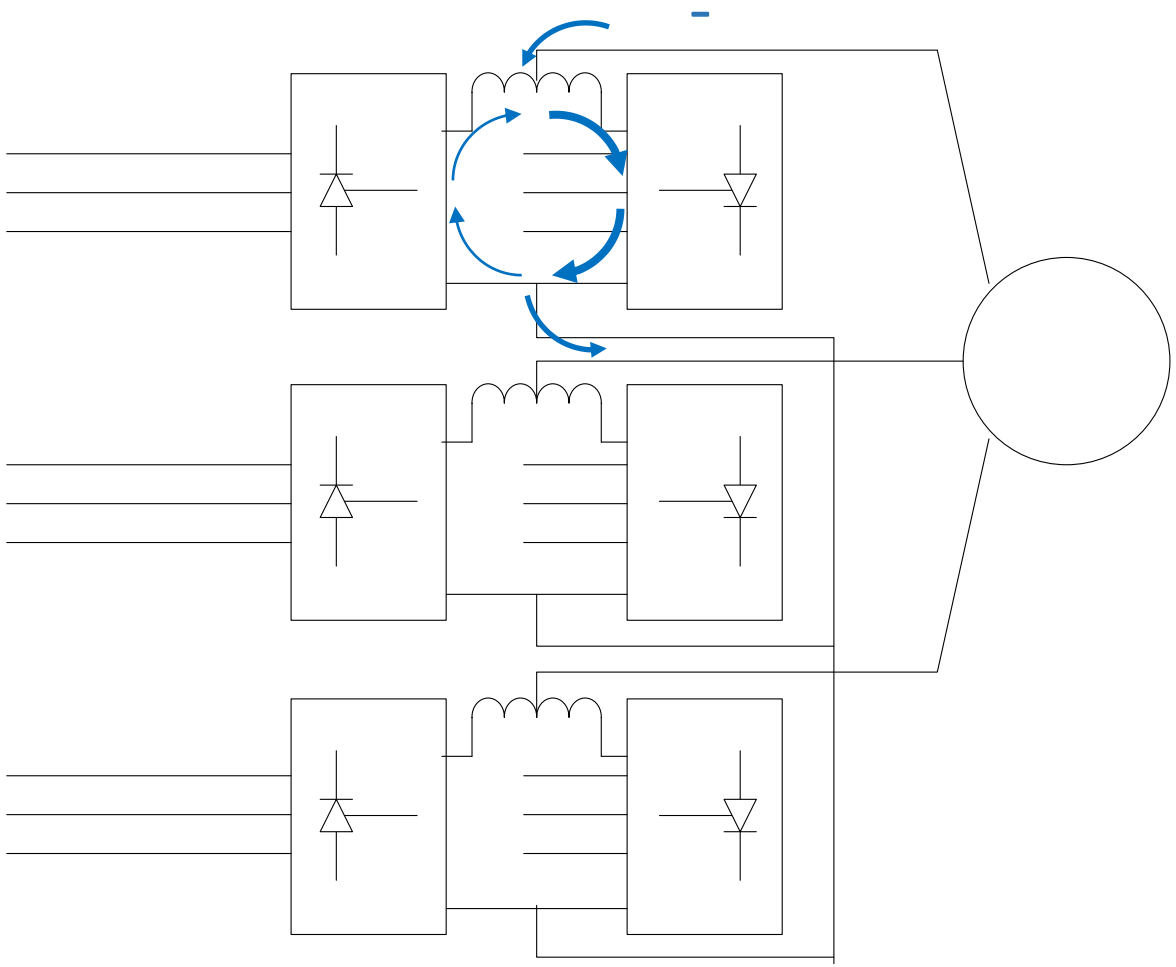

DigiFCR CYC

CIRCULATING CURRENT

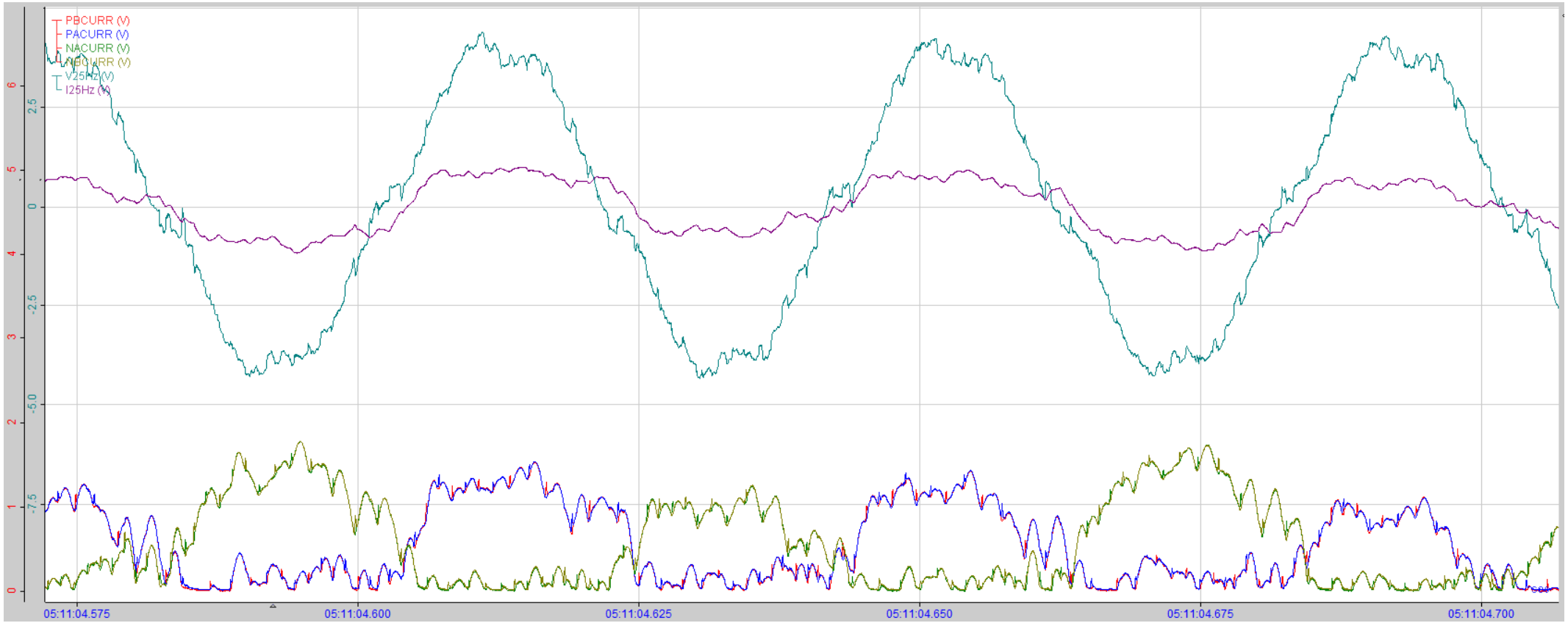

DigiFCR CYC

CIRCULATING CURRENT

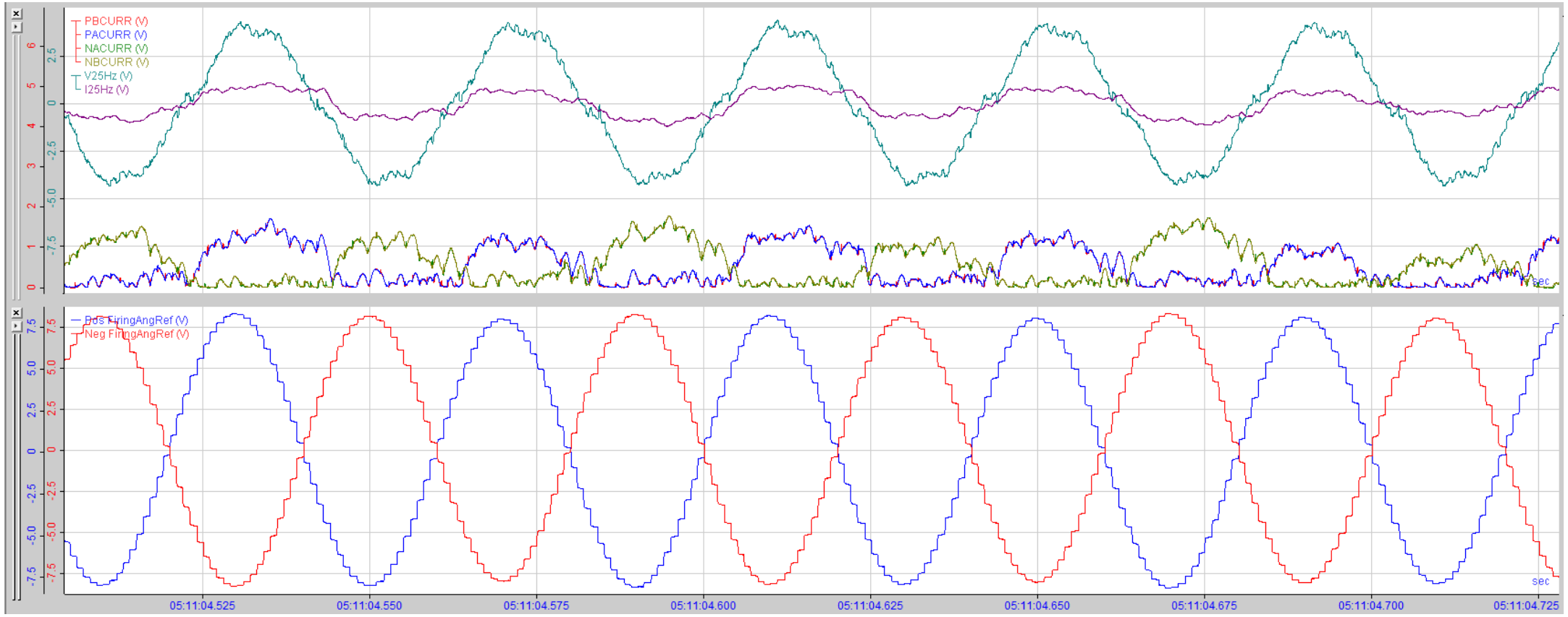

DigiFCR CYC Circulating Curre

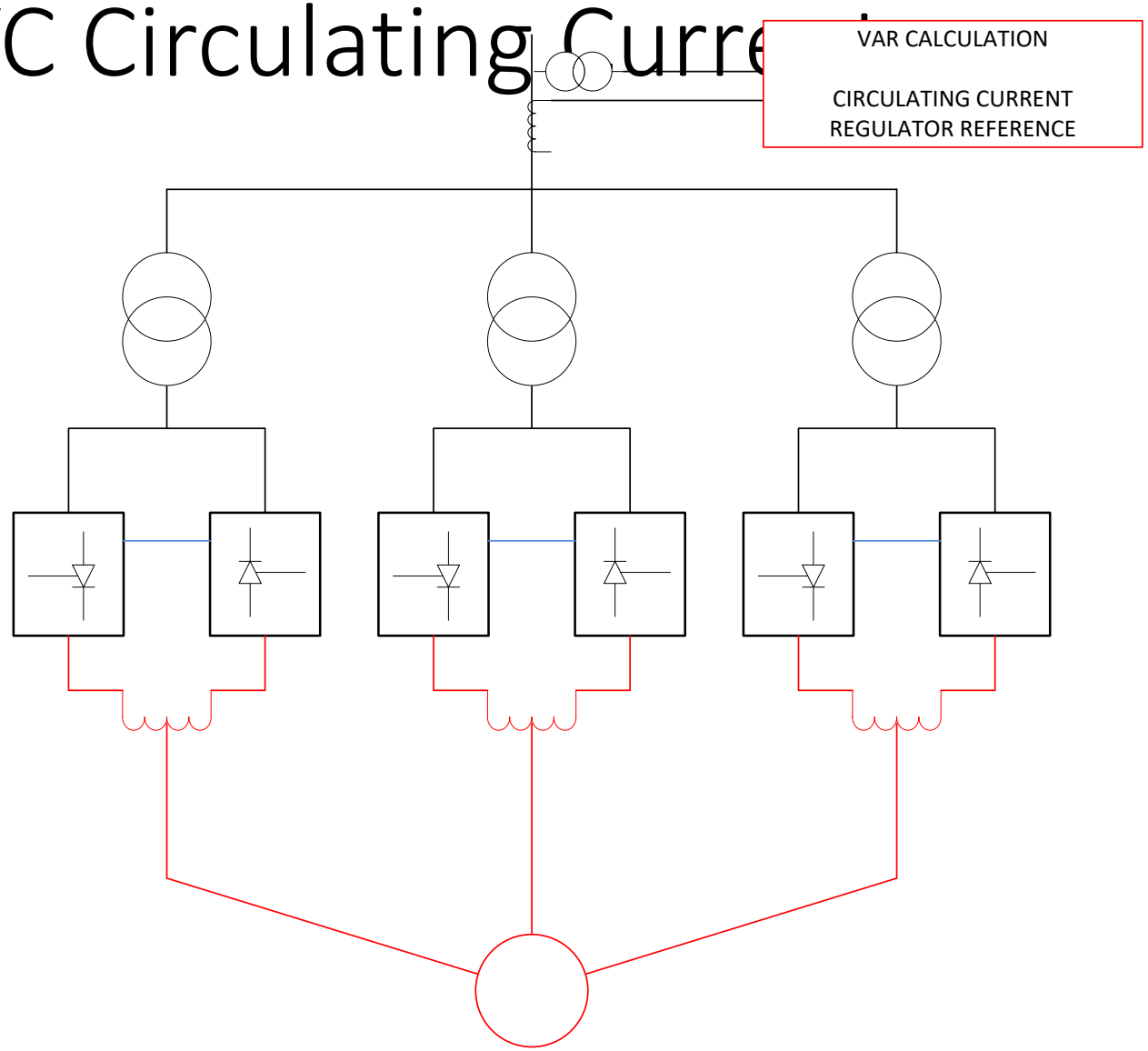

Circulating Current vs NonCirculating Current

CONCEPT	Circulating Current	Non Circulating Current
Real State	High Real state -Interphase reactors	No reactors needed.
Commutation Faults	Less Risk -SCR always conducting.	More Risk -need to stop conduction of SCRs to change current direction
Performance	Higher Frequency Faster Corrections	Lower Frequency SCR shutting down delay.
Incoming Power Factor	Can improved using circulating current control techniques.	Worst than circulating current.

DigiFCR CYC

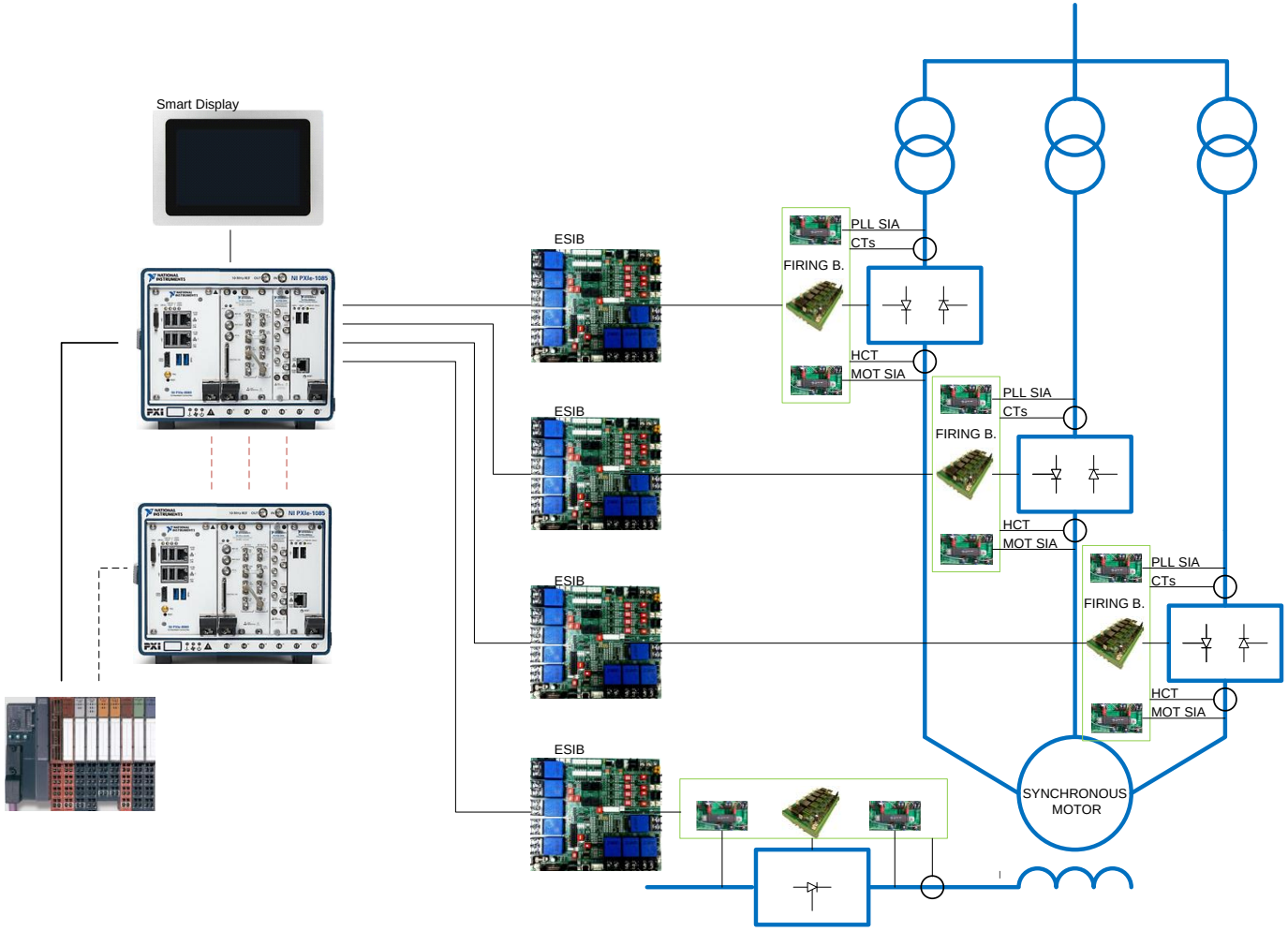
Smart Display
ESIB
ESIB
ESIB
ESIB
PLL SIA
CTs
FIRING B.
HCT
MOT SIA
PLL SIA
CTs
FIRING B.
HCT
MOT SIA
PLL SIA
CTs
FIRING B.
HCT
MOT SIA
SYNCHRONOUS
MOTOR

HARDWARE

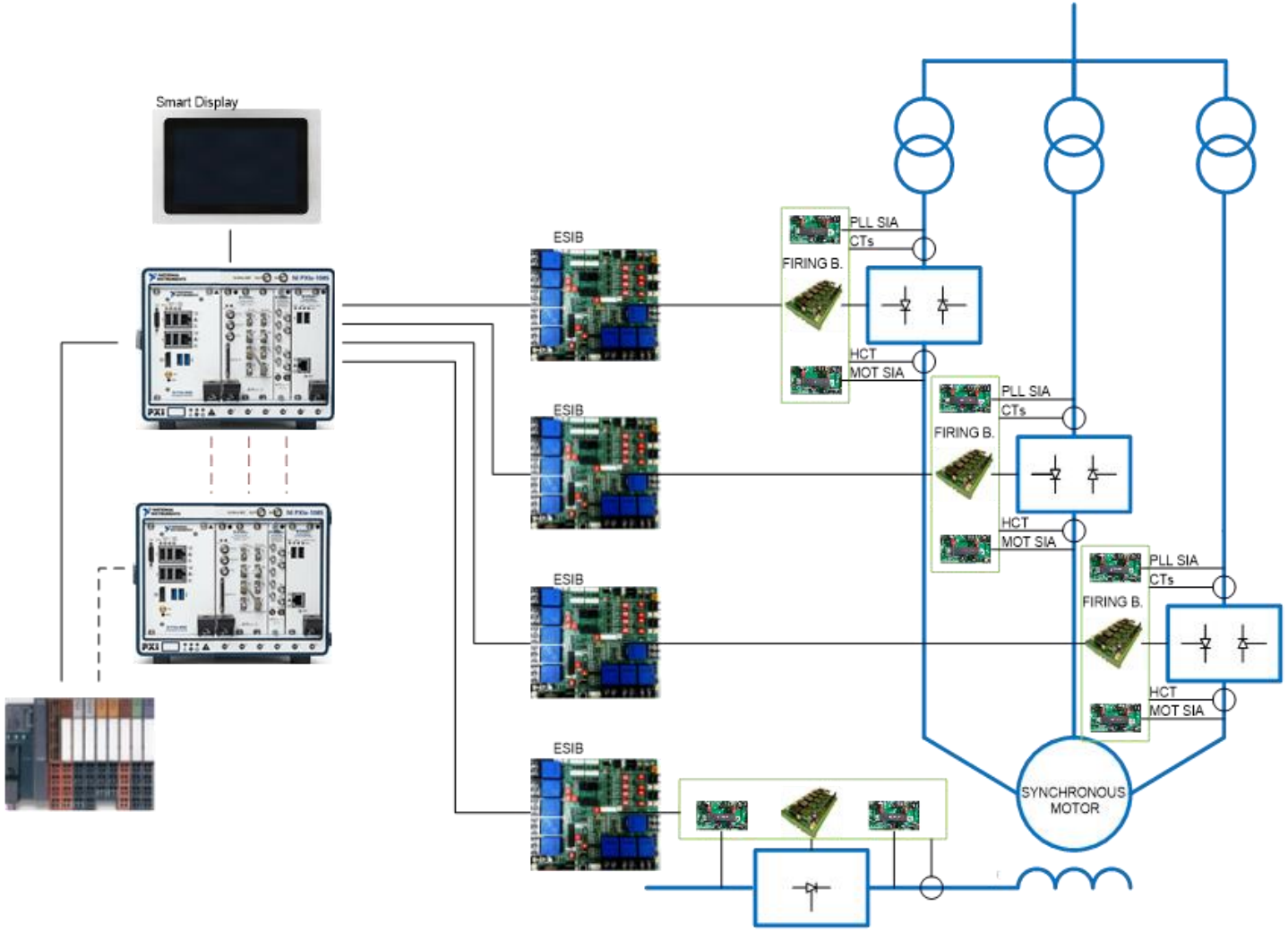
Smart Display
ESIB
ESIB
ESIB
ESIB
PLL SIA
CTs
FIRING B.
HCT
MOT SIA
PLL SIA
CTs
FIRING B.
HCT
MOT SIA
PLL SIA
CTs
FIRING B.
HCT
MOT SIA
SYNCHRONOUS MOTOR

Digi CYC Plattform

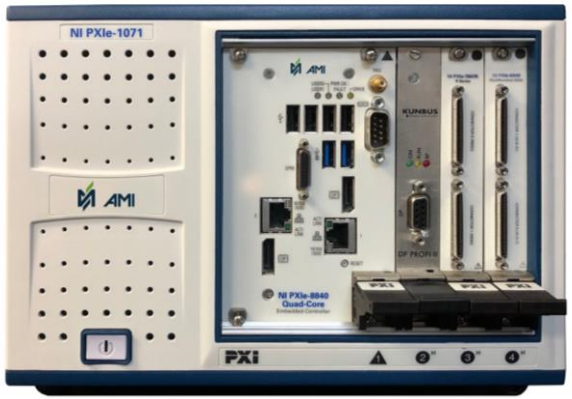

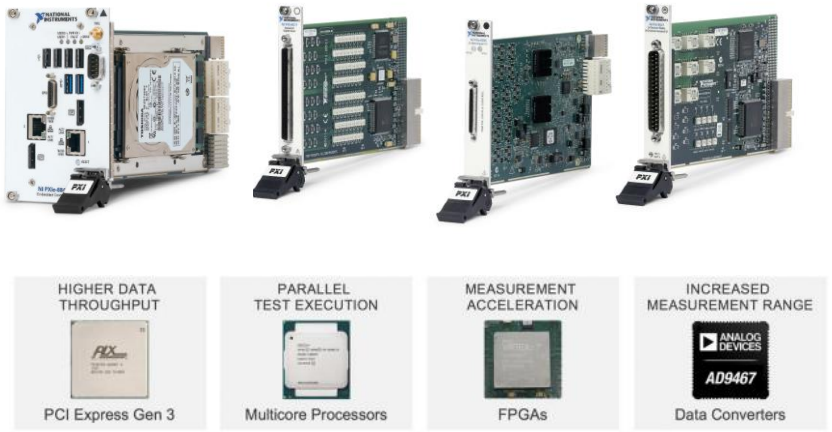

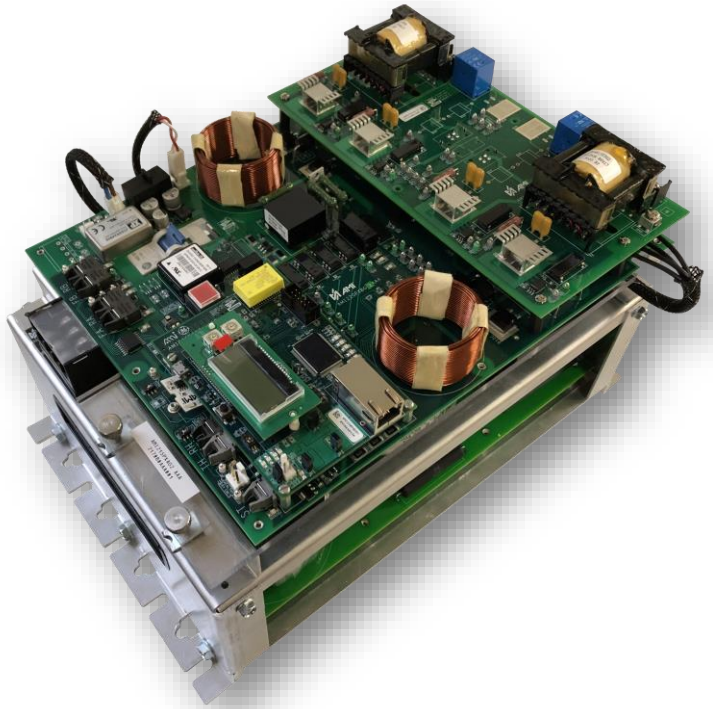

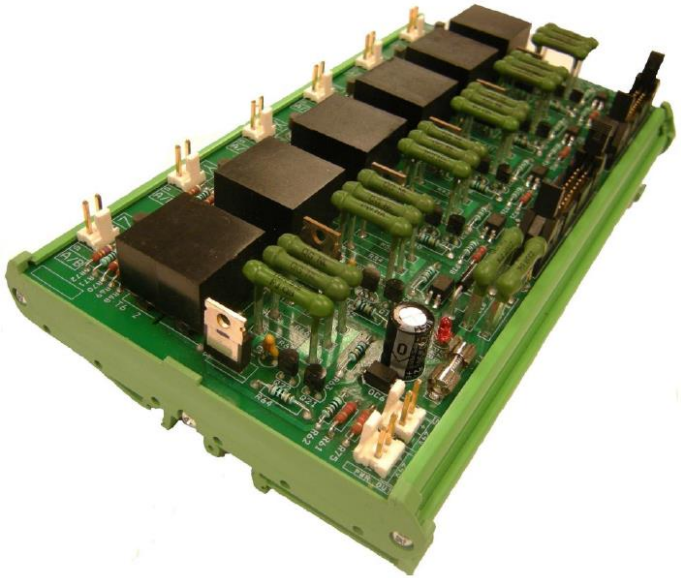

Typical Firing Technologies: AMI220PXA

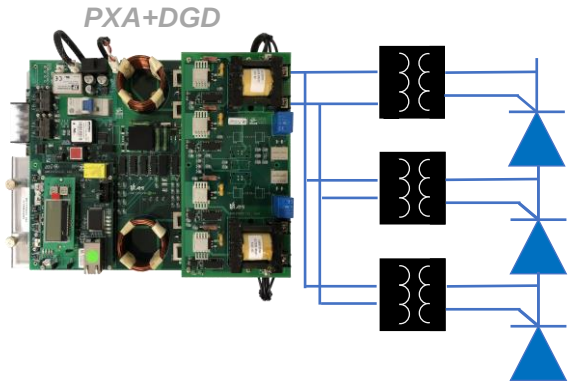

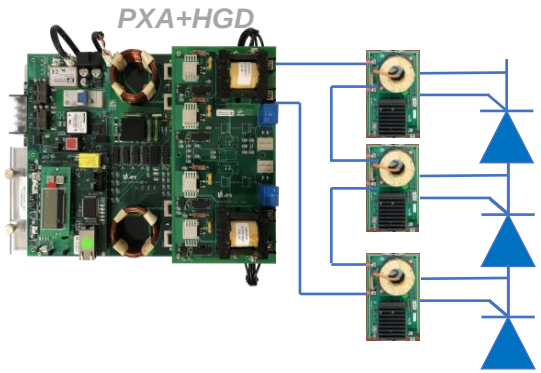

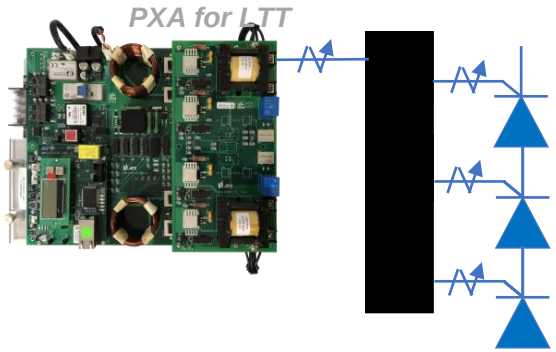

DigiFCR™- SmartDisplay™

- **Local operation capability** (Start, Stop, Jog, Reset and Speed Reference Adjustment).
- **Monitoring of drive variables** using numeric animations and meter displays.
- **Live trend of drive variables** with adjustable time interval and amplitude scale.
- **Active faults, permissives and alarms report related to the drive.** Parameter help related to the faults can be displayed.

- **Fault CaptureBuffer in a tabular format.** Trend data information download capability using the Tracesave application accessible from a mobile device using Wi-Fi connection.
- **General Information and event counter report.**
- **Control block diagram with live data animation** of the main variables.
- **Drive I/O monitoring**
- **Starting Sequence analysis.**

DigiFCR™- SmartDisplay™ Maintainability

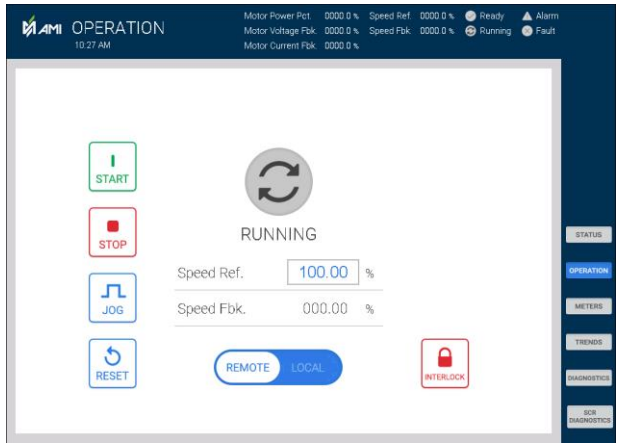

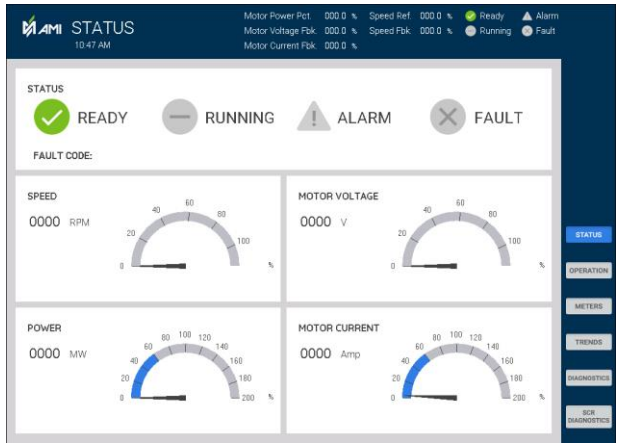

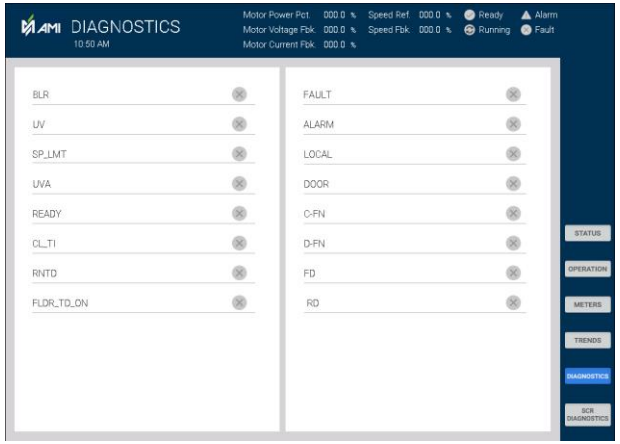

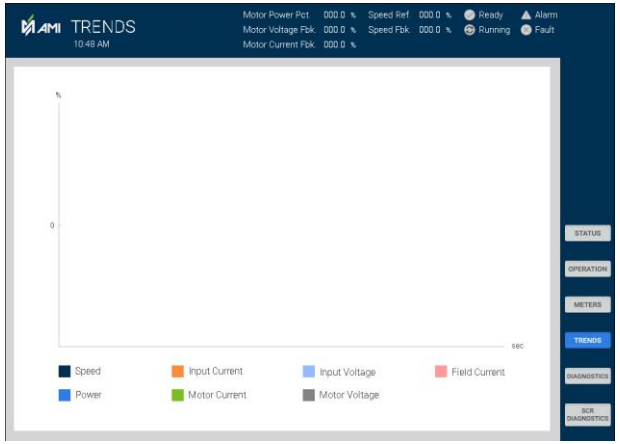

DigiFCR enhanced diagnostics

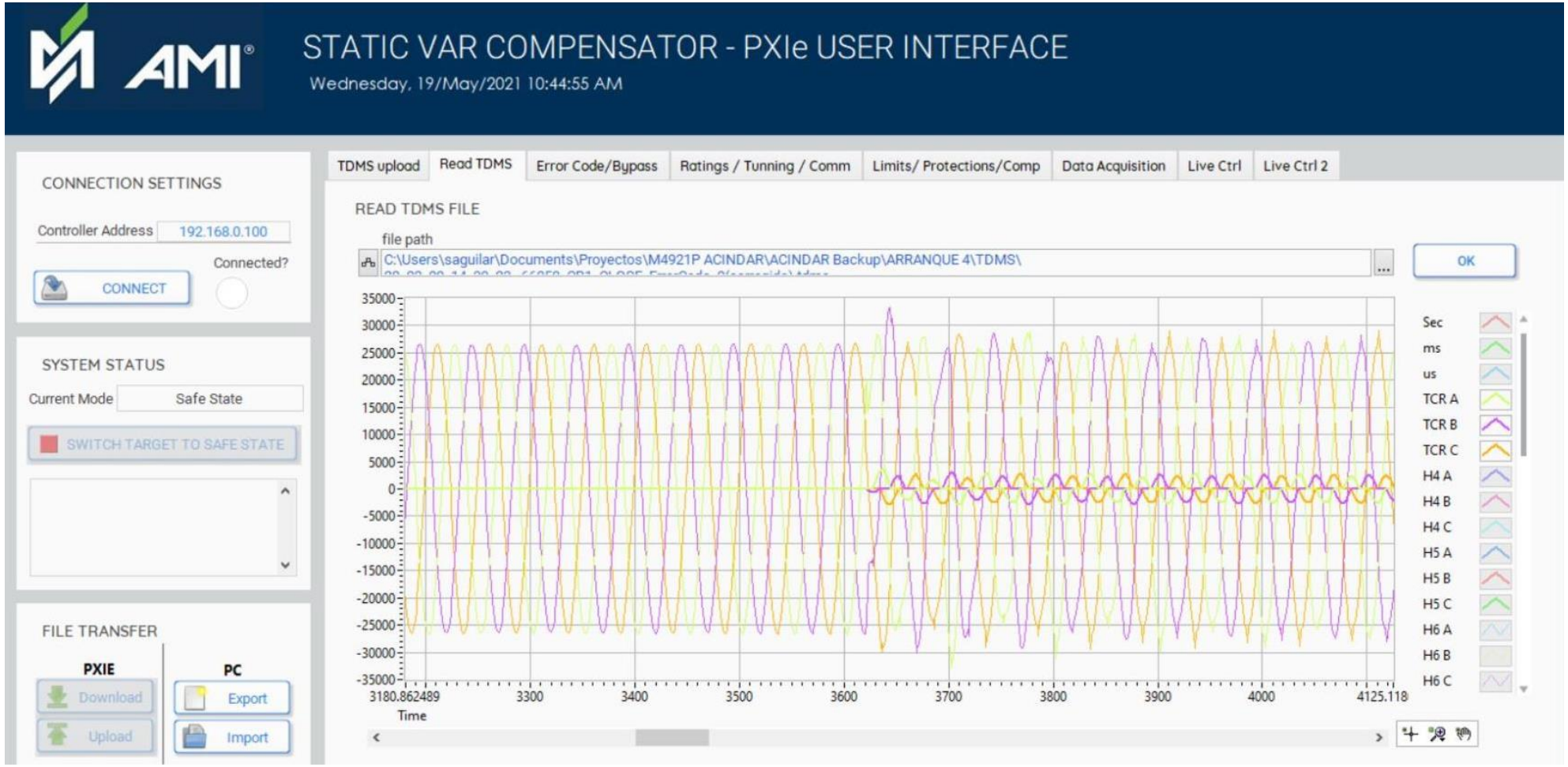

DigiFCR enhanced diagnostics

Advanced Diagnostics

- Fault, Alarm and Event Display
- Fault, alarm and events history log
- Set time shows fault activation time
- Clear time shows fault clear time

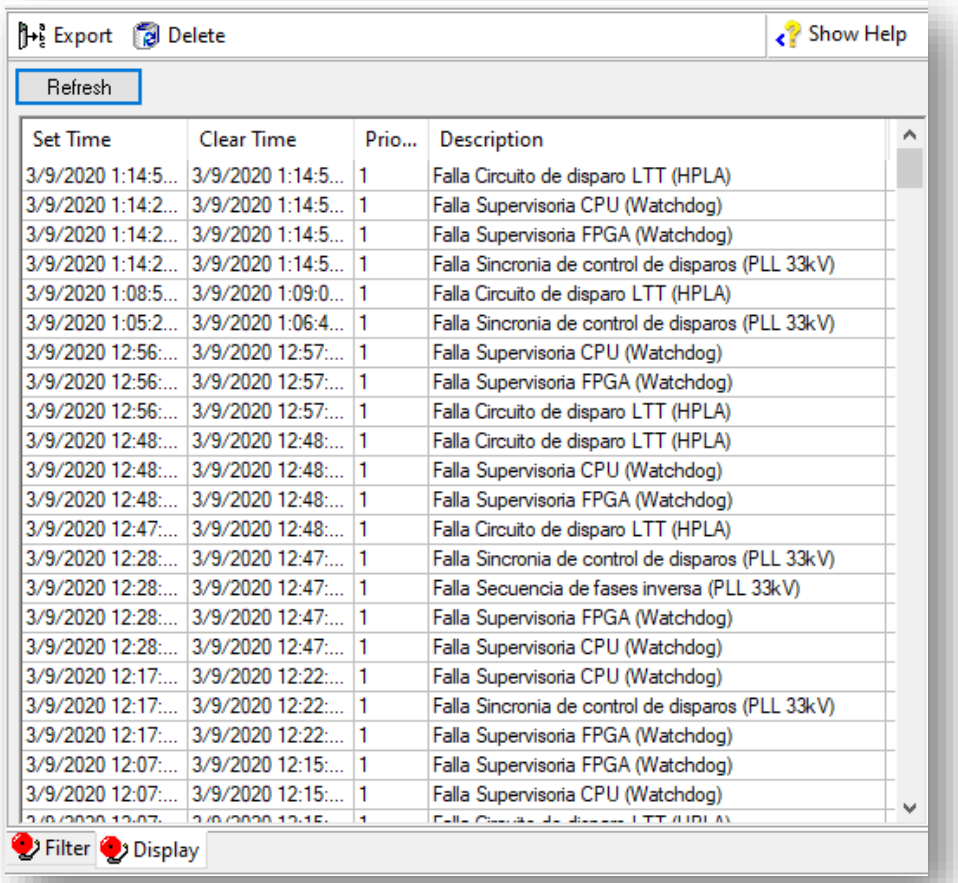

Set Time	Clear Time	Prio...	Description
3/9/2020 1:14:5...	3/9/2020 1:14:5...	1	Falla Circuito de disparo LTT (HPLA)
3/9/2020 1:14:2...	3/9/2020 1:14:5...	1	Falla Supervisoria CPU (Watchdog)
3/9/2020 1:14:2...	3/9/2020 1:14:5...	1	Falla Supervisoria FPGA (Watchdog)
3/9/2020 1:14:2...	3/9/2020 1:14:5...	1	Falla Sincronia de control de disparos (PLL 33kV)
3/9/2020 1:08:5...	3/9/2020 1:09:0...	1	Falla Circuito de disparo LTT (HPLA)
3/9/2020 1:05:2...	3/9/2020 1:06:4...	1	Falla Sincronia de control de disparos (PLL 33kV)
3/9/2020 12:56:...	3/9/2020 12:57:...	1	Falla Supervisoria CPU (Watchdog)
3/9/2020 12:56:...	3/9/2020 12:57:...	1	Falla Supervisoria FPGA (Watchdog)
3/9/2020 12:56:...	3/9/2020 12:57:...	1	Falla Circuito de disparo LTT (HPLA)
3/9/2020 12:48:...	3/9/2020 12:48:...	1	Falla Circuito de disparo LTT (HPLA)
3/9/2020 12:48:...	3/9/2020 12:48:...	1	Falla Supervisoria CPU (Watchdog)
3/9/2020 12:48:...	3/9/2020 12:48:...	1	Falla Supervisoria FPGA (Watchdog)
3/9/2020 12:47:...	3/9/2020 12:48:...	1	Falla Circuito de disparo LTT (HPLA)
3/9/2020 12:28:...	3/9/2020 12:47:...	1	Falla Sincronia de control de disparos (PLL 33kV)
3/9/2020 12:28:...	3/9/2020 12:47:...	1	Falla Secuencia de fases inversa (PLL 33kV)
3/9/2020 12:28:...	3/9/2020 12:47:...	1	Falla Supervisoria FPGA (Watchdog)
3/9/2020 12:28:...	3/9/2020 12:47:...	1	Falla Supervisoria CPU (Watchdog)
3/9/2020 12:17:...	3/9/2020 12:22:...	1	Falla Supervisoria CPU (Watchdog)
3/9/2020 12:17:...	3/9/2020 12:22:...	1	Falla Sincronia de control de disparos (PLL 33kV)
3/9/2020 12:17:...	3/9/2020 12:22:...	1	Falla Supervisoria FPGA (Watchdog)
3/9/2020 12:07:...	3/9/2020 12:15:...	1	Falla Supervisoria FPGA (Watchdog)
3/9/2020 12:07:...	3/9/2020 12:15:...	1	Falla Supervisoria CPU (Watchdog)

3rd Harmonic / Trapezoidal Modulation

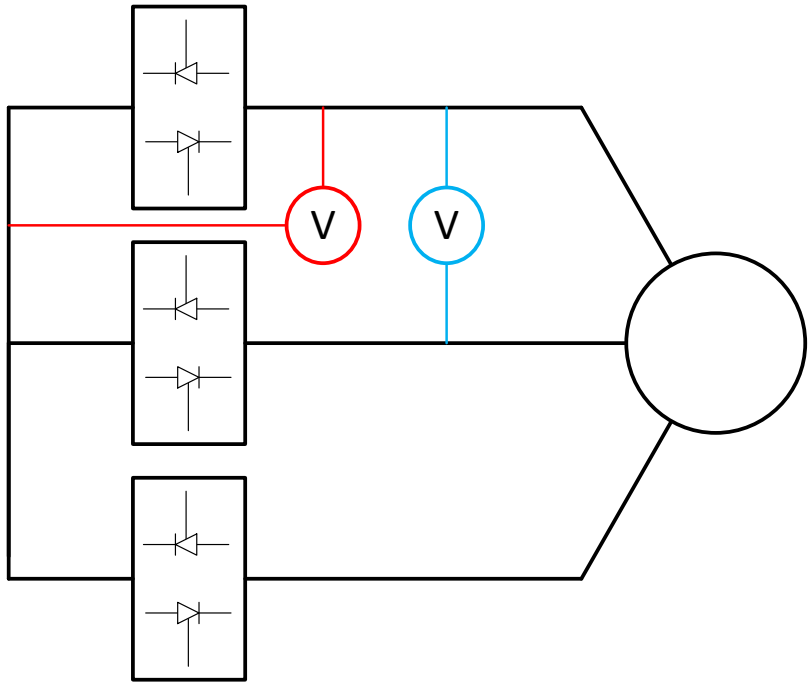

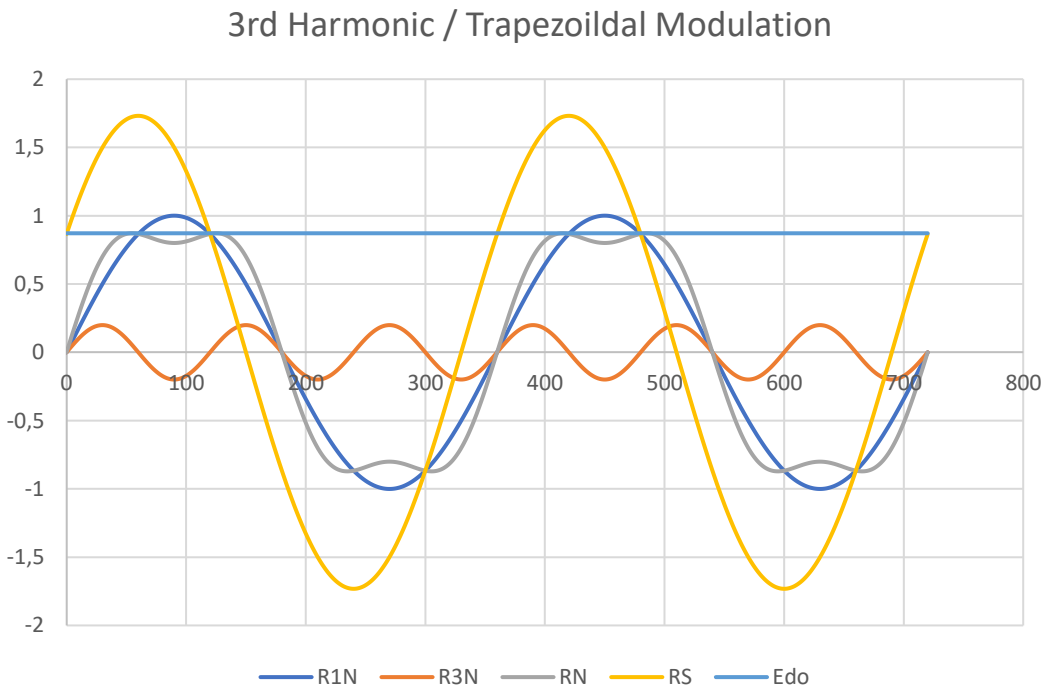

- Edo – highest DC voltage that can be achieved by the rectifier
- Voltage in the transformer secondary can be reduced
  - Better power factor
  - Reduced Voltage Spikes

Asymmetrical Firing

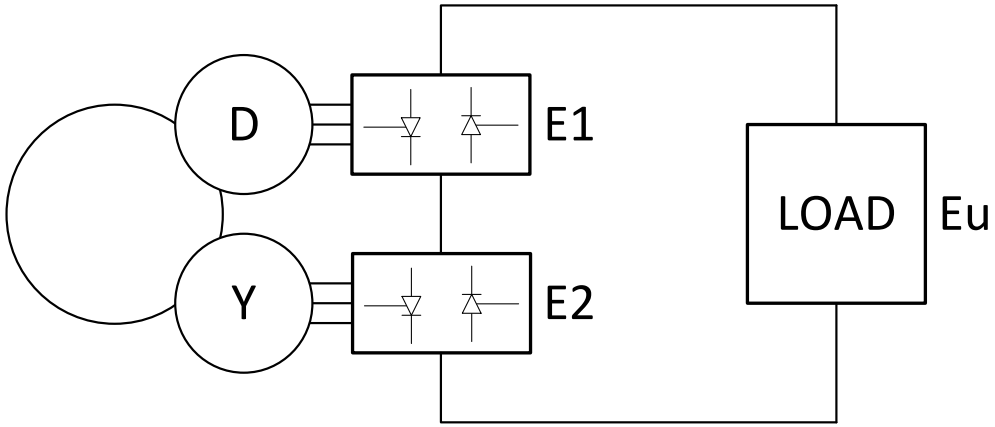

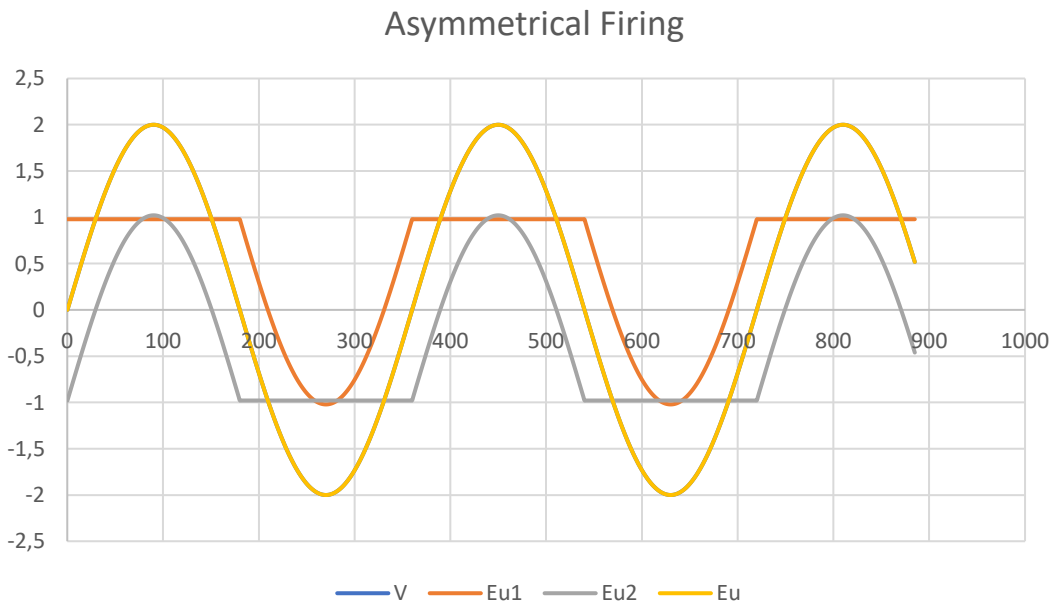

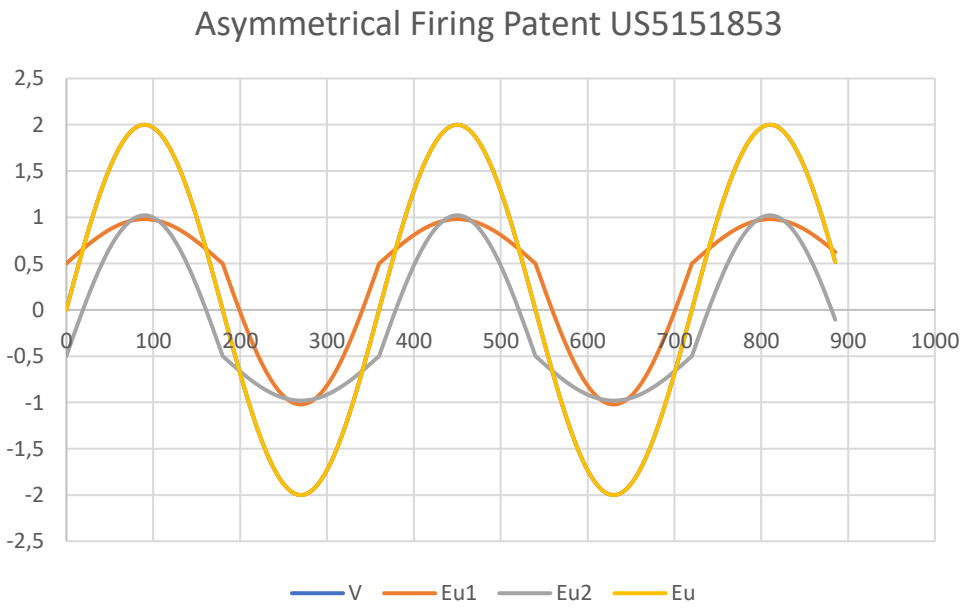

DigiFCR for different applications

DigiCYC for Induction Motor

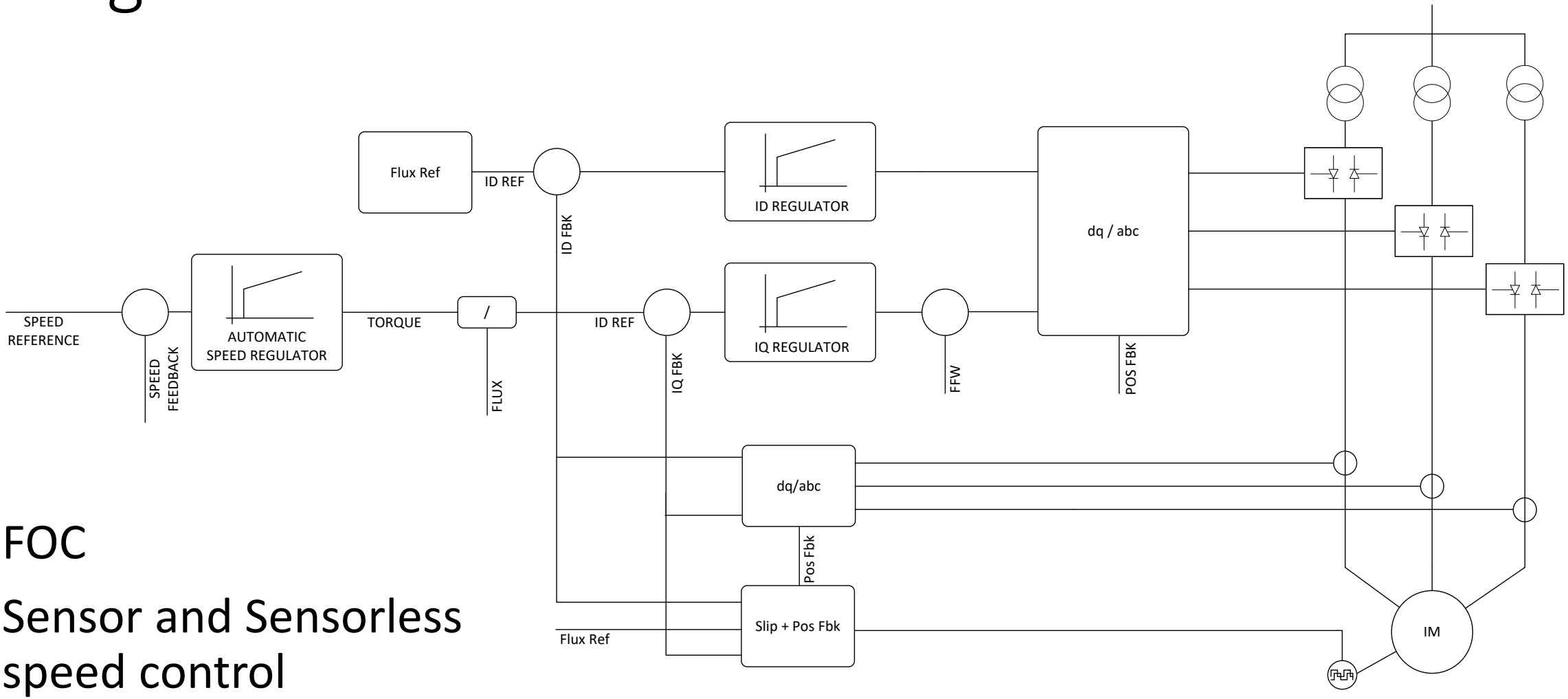

- FOC
- Sensor and Sensorless speed control

DigiCYC for Synchronous Motor

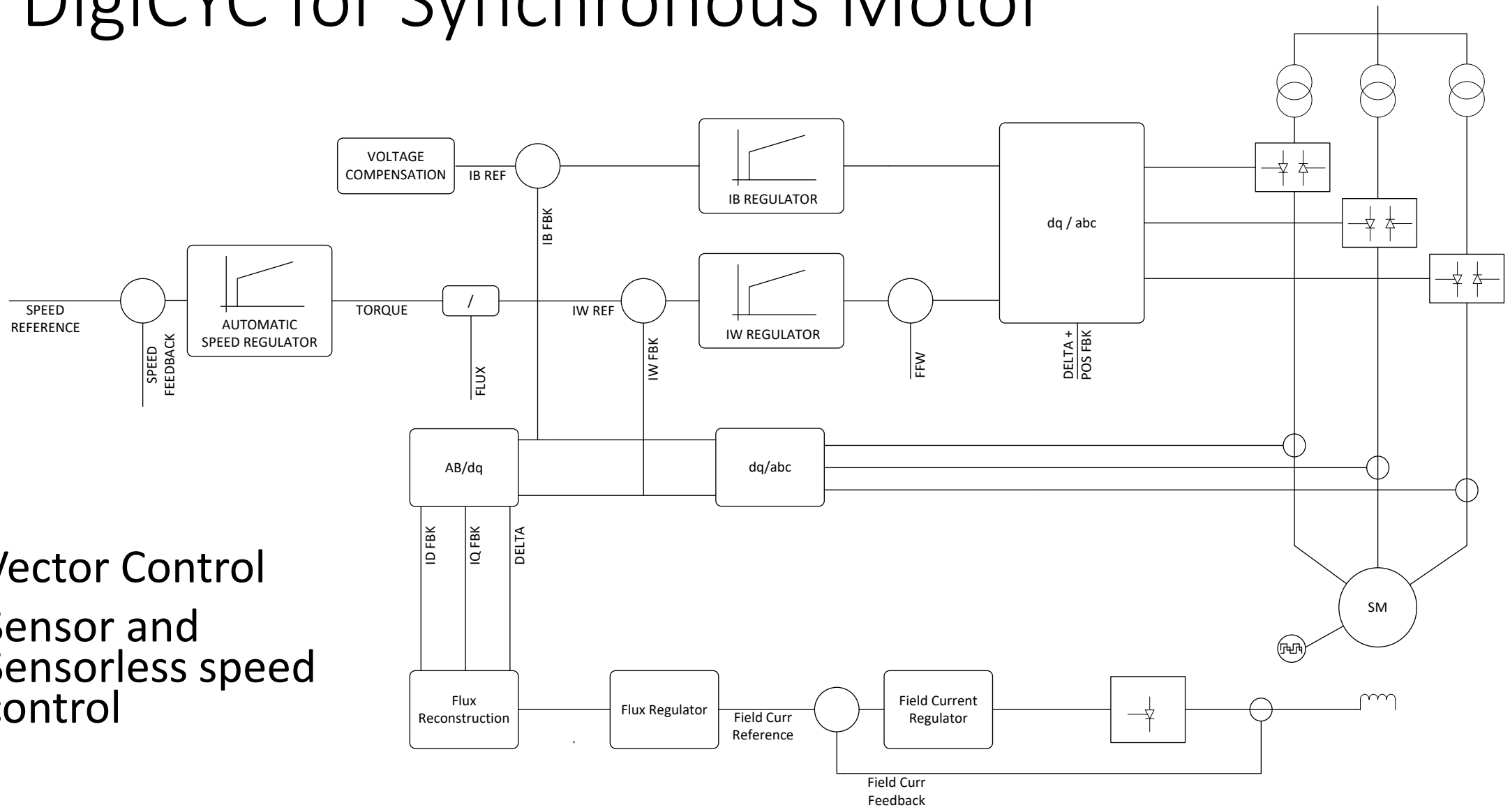

- Vector Control
- Sensor and Sensorless speed control

DigiCYC

STAR WINDING

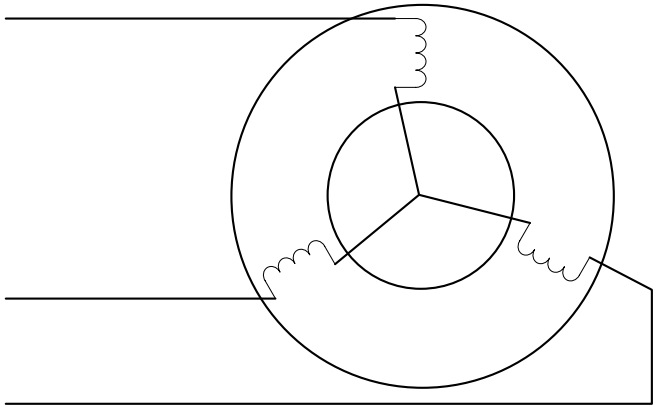

OTHERS AVAILABE

OPEN WINDING

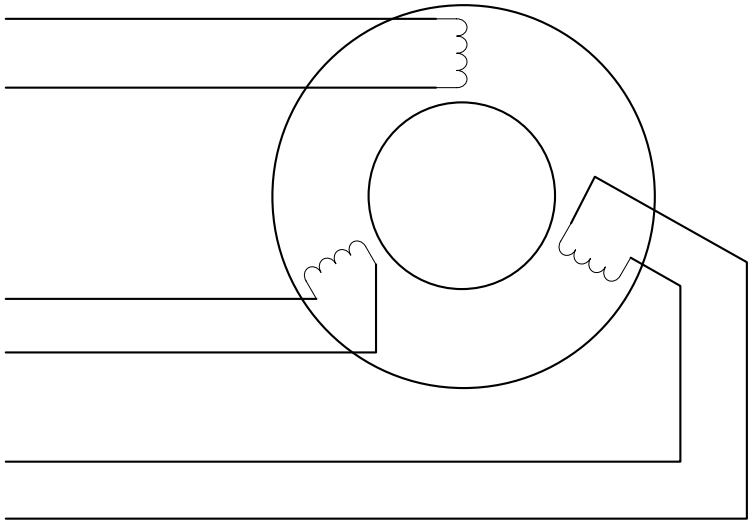

Synchronous Motor

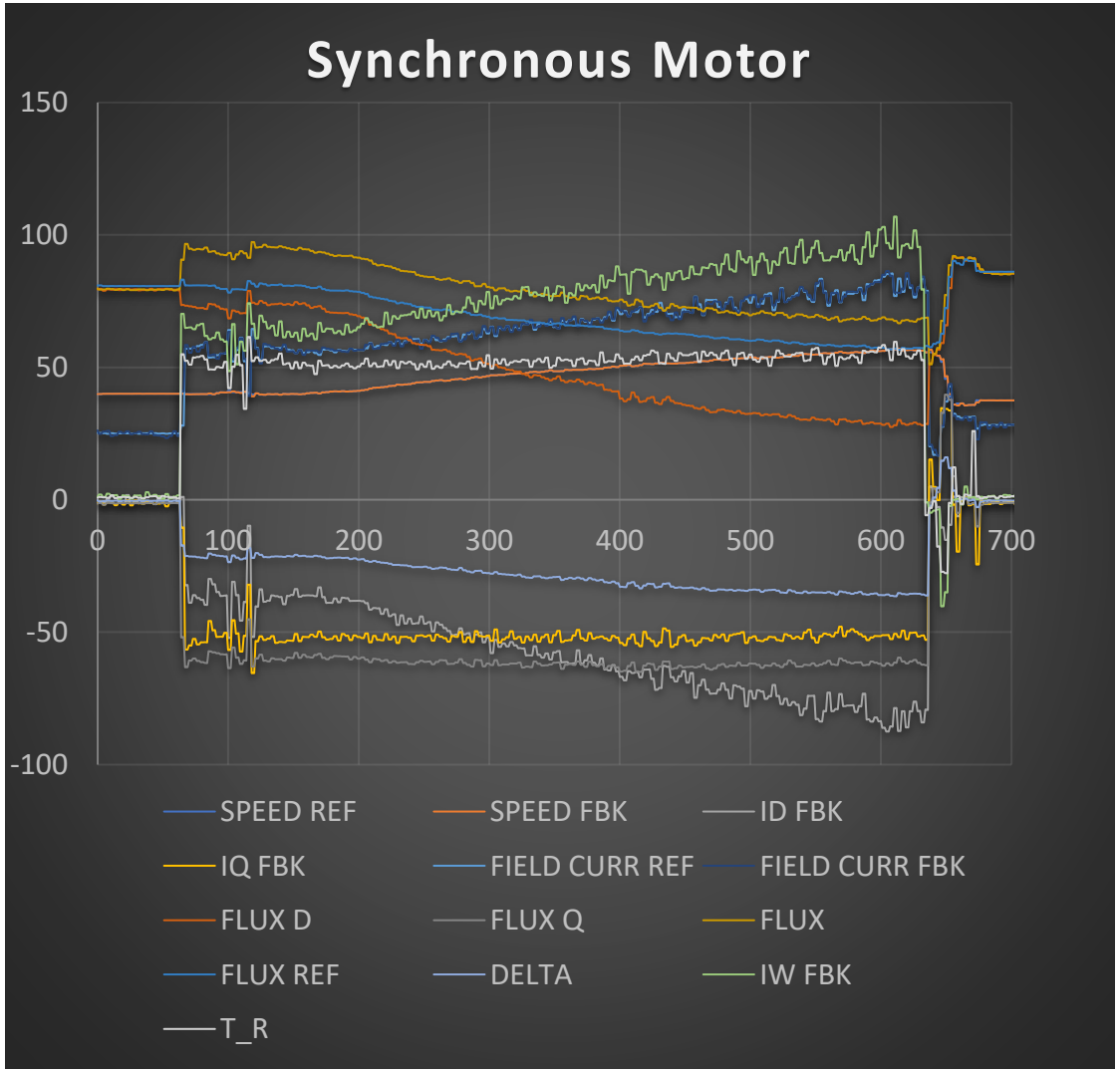

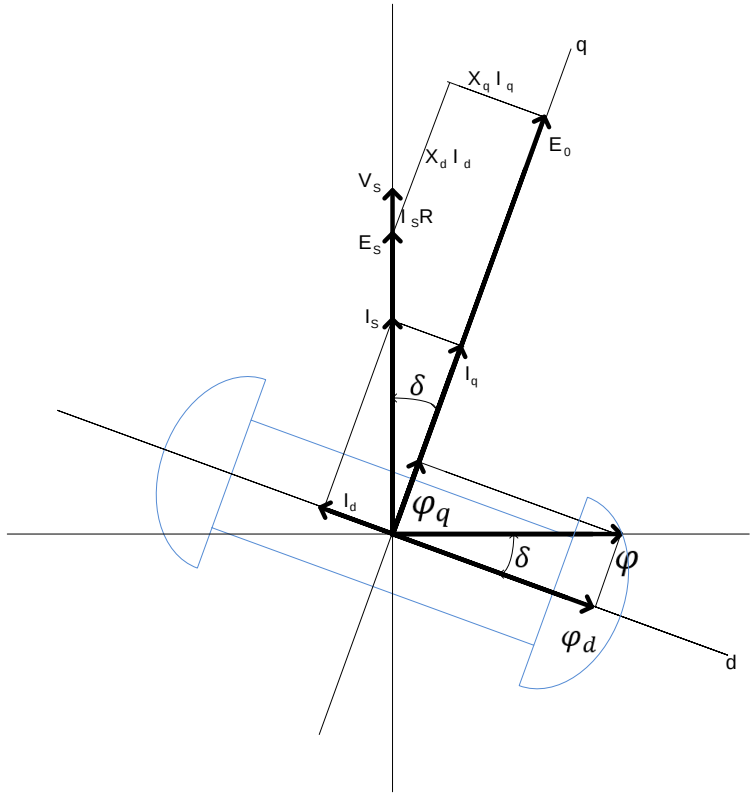

$$\lambda_d = x_d I_d + i_f$$

$$\lambda_d = x_q I_q$$

$$\delta = \tan^{-1} \frac{\lambda_q}{\lambda_d}$$

DigiFCR CYC for 25 Hz transmission line

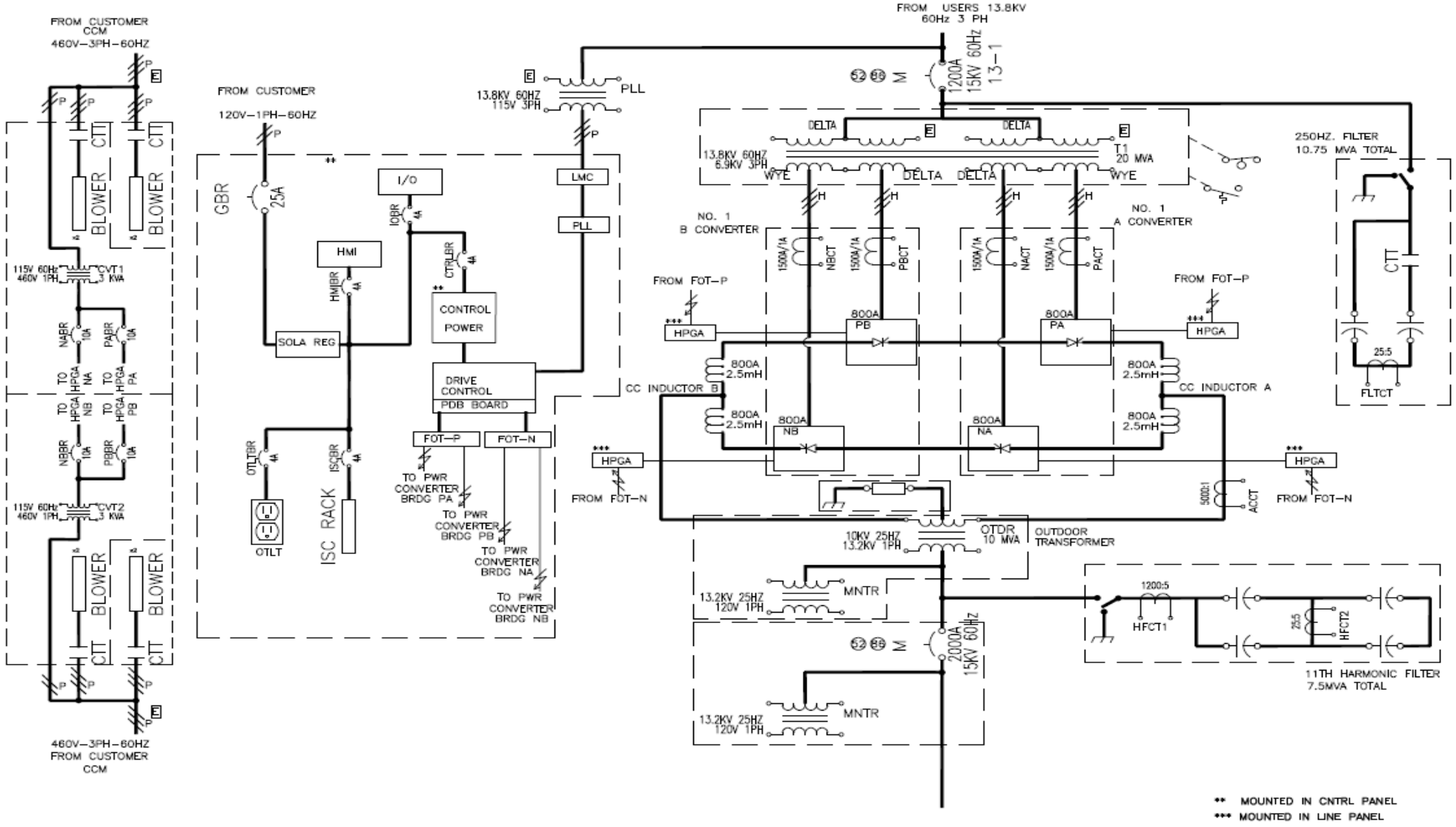

DigiFCR CYC for 10MW substation

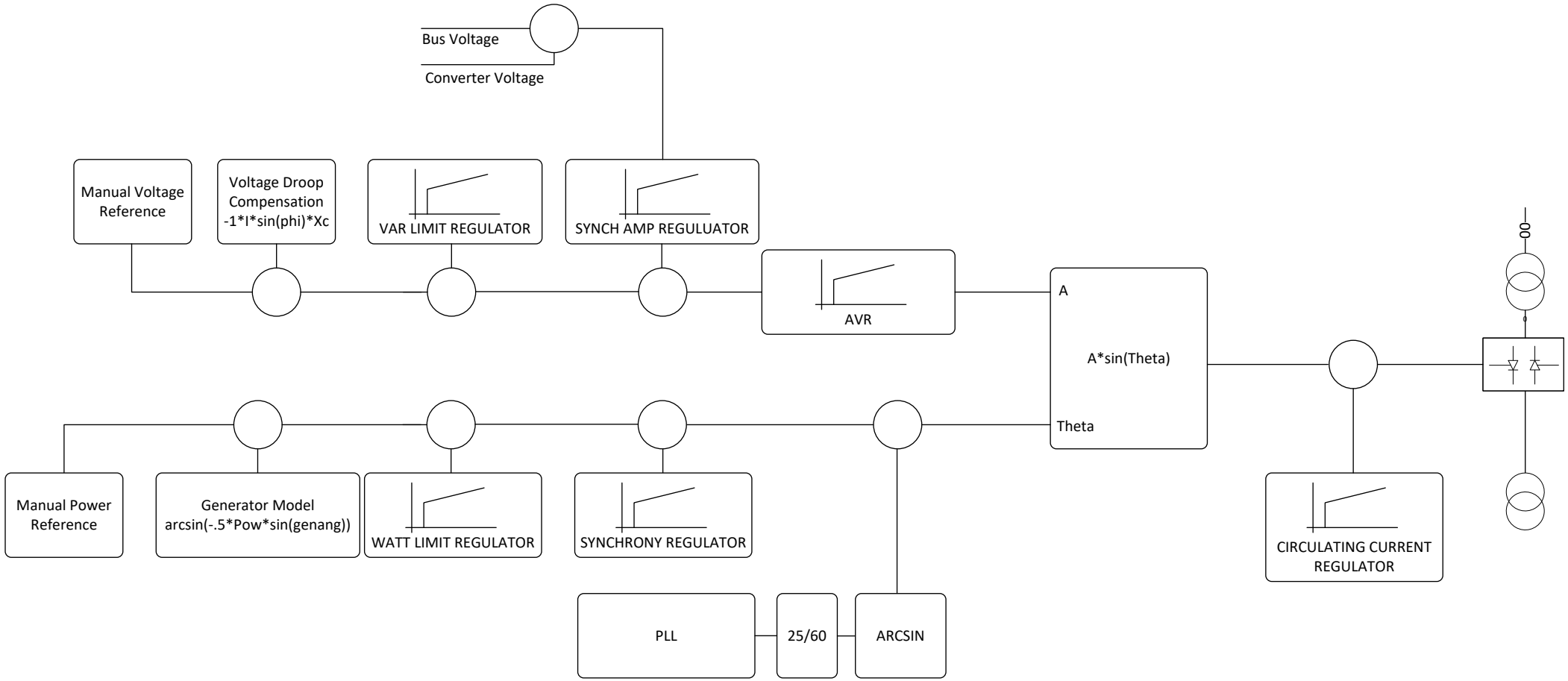

DigiFCR CYC for 25 Hz transmission line

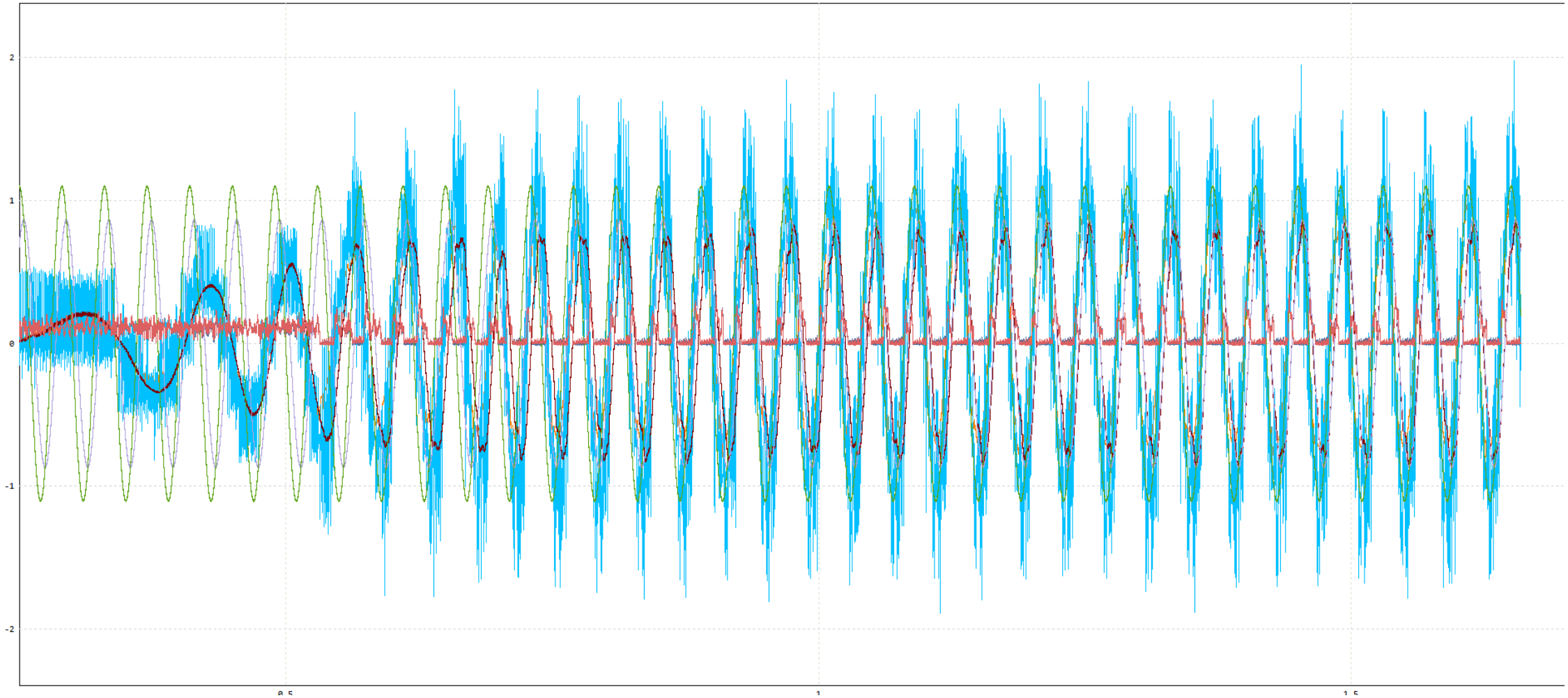

DigiFCR CYC for 25 Hz transmission line

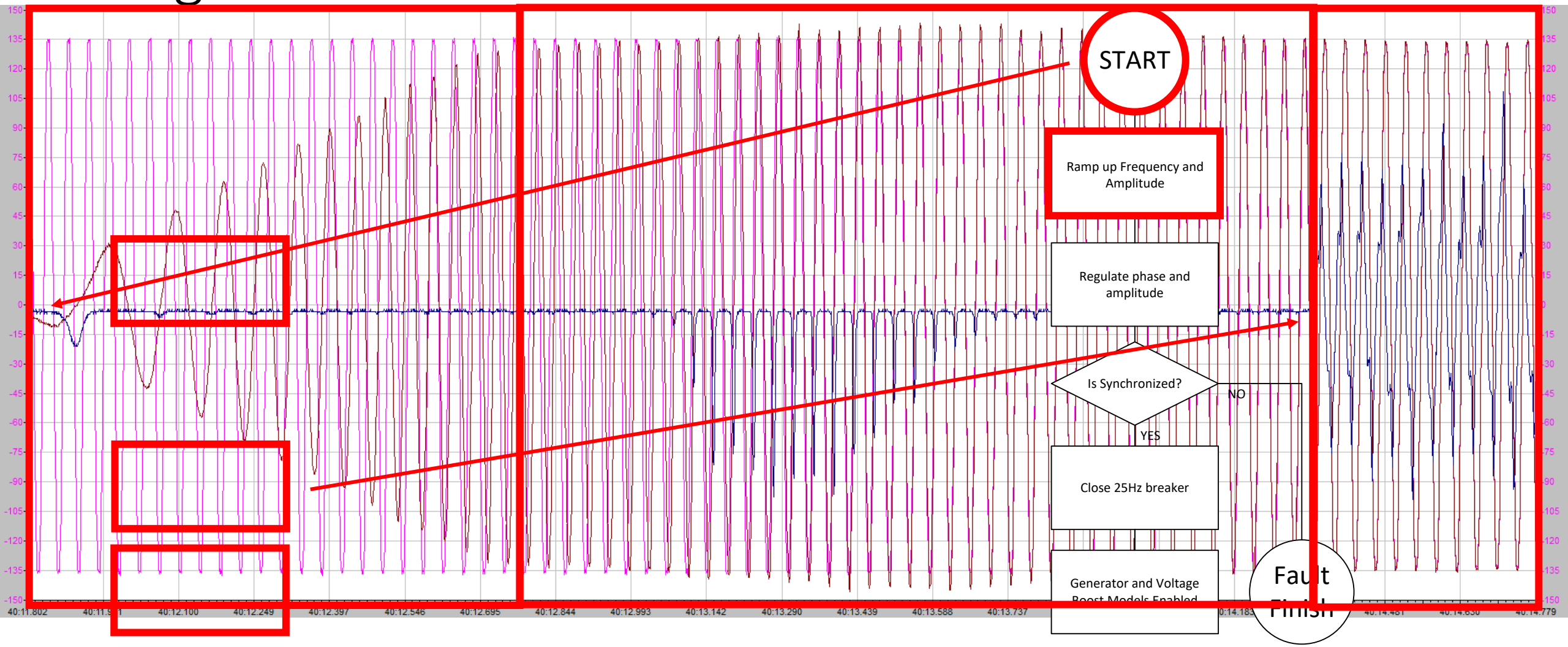

Conclusions

- Cycloconverters still have a lot to offer.
  - Easier to find semiconductor replacements compare to its PWM successor.
- The ROI of retrofitting a cycloconverter is better compared vs installing a new PWM drive.
  - The outage time is significantly less compare to replacing the drive.
- DigiCYC is a solution that can be applied to any kind and brand of cycloconverter
  - Circulating or NON circulating Current
  - IM, SM or others.
  - Any kind of motor with any number of windings.

Thanks!!!