Green Power Solutions

Modernization of Vintage Thyristor Power Converters

Angelo Odone – GPS AMI

GPS Tech Seminar 2023

Revamping Main Topics

Background

- ✓ Very high quantity of Thyristor Power Converters and Motor Drives installed worldwide.
- ✓ Many of these are legacy discontinued products operating for several decades
- ✓ By the power rating and typical application main drives and power converters correspond to a high market values.
- ✓ Revamping of the main drives and power converters is a high payback investment of End Users.
- ✓ Retrofit/upgrade of the Power Converters based on Phase Controlled Thyristor technology can be a convenient alternative versus the complete replacement by new technologies (IGBT, IGCT).

- ➢ Revamping and Retrofit of Main Drive and Power Converter Systems are normally made through direct PO from End Users

- ➢ System Integrator design capabilities and the availability of updated control platforms are key requirements for a competitive approach to this type of project.

Power Converter/Drive System Modernization

High Power Thyristor Converter Applications:

- DC Motor Variable Speed Drives: Rectifiers 700÷1200 V / up to 25 kA
- AC Motor Variable Speed Drives: Cycloconverter 1000÷4000 Vac / 3÷20 MVA
- AC Motor/Generator Variable Speed Drives & Soft Starters: LCI 2,4÷6,9÷11 kV / 4,5 ÷ 25 ÷ 72 MVA
- High Current DC Power Supplies: EAF, Electro-Chemical Rectifiers up to 1500 V / 200 kA
- Static VAR Compensator: TCR, TCC 10 ÷ 35 kV / 50 ÷ 350 MVA
- Static Field Exciters: Rectifiers 600 ÷ 1200 Vac / 150 ÷ 8000 Adc

Thyristor Converters (*discontinued*) for DC Motor Drives

GE Silco-2000 Front/Rear drive panel equipped by Regen 12-Pulse 4-Parallel Thyristor Converter
700 V / 12600 A

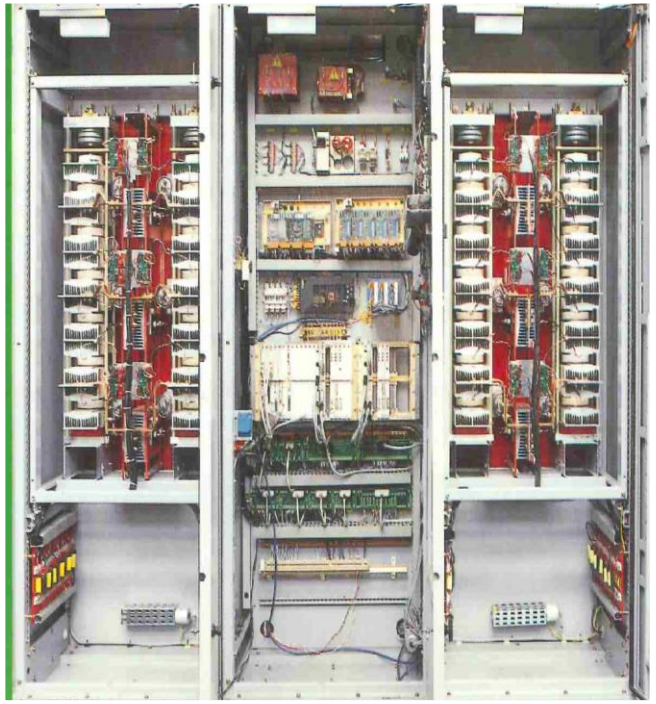

Ansaldo Silco-2 drive panel equipped by Regen 12-Pulse Thyristor Converter
1200 V / 4000 A

Ansaldo Silco-750 drive cabinet with 4-Parallel (12 Stack) Regen 6-Pulse Thyristor Converter

Thyristor Cycloconverters for AC Motor Drives

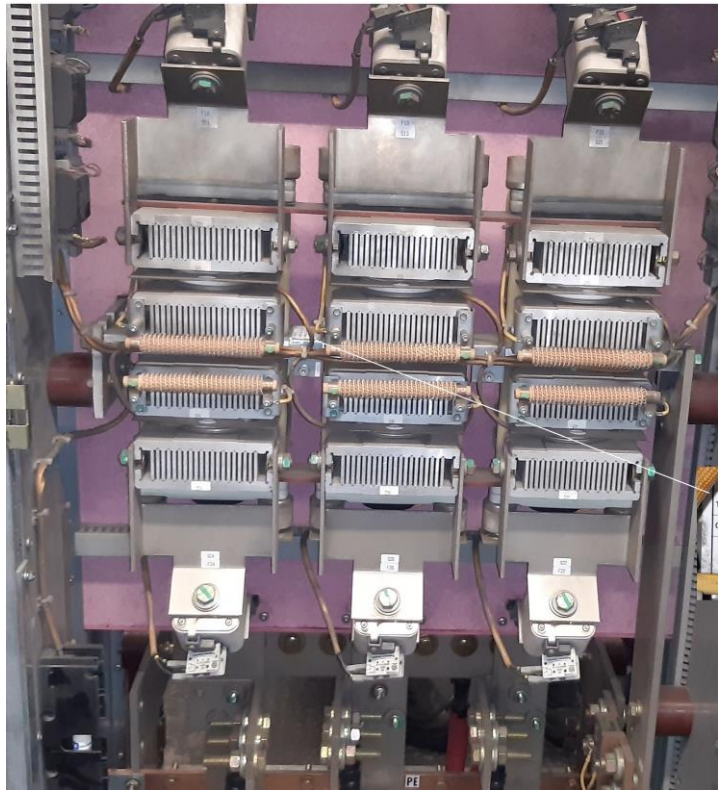

ACS6000-C half-phase drive panel equipped by Bidirectional 6-Pulse Thyristor Converter (1 of 6)

Silcovert-C phase drive panel equipped by Bidirectional 6-Pulse Thyristor Fuseless Converter (1 of 3)

Sinamics SL150 phase drive panel equipped by Bidirectional 6-Pulse Thyristor Converter (1 of 3)

Thyristor LCI for MV AC Synchronous Motor Drives

LCI = Load Commutated Inverter

Variable Speed Drive
MV-CSI Type
Include:

- Power Transformer
- Rectifier
- DC-Reactor
- Inverter
- Field Exciter

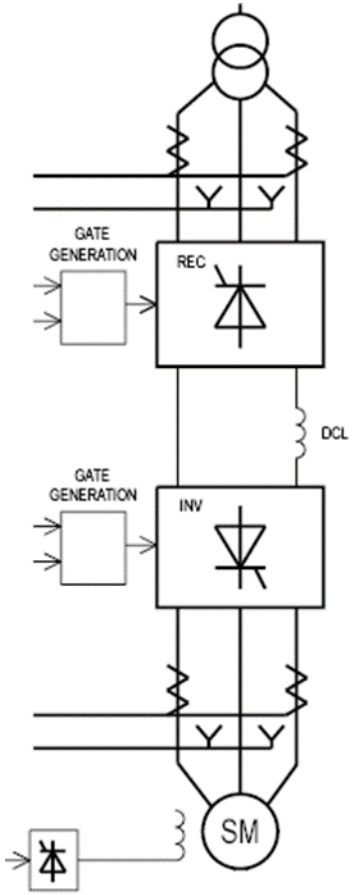

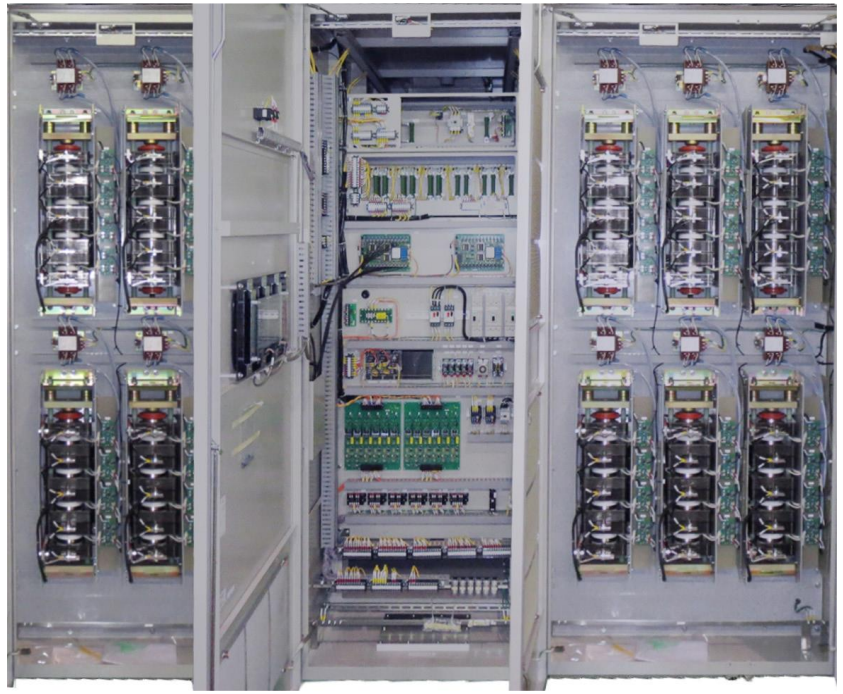

TMdrive-LCIe2 drive panel
12-Pulse Rectifier 6-Pulse Inverter
12-Stack/4-Thyristor
Air Cooling

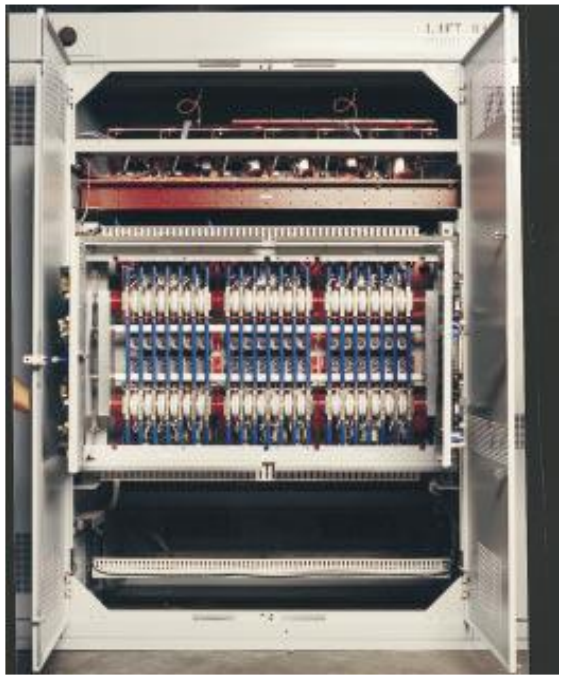

GE Innovation-LCI drive panel
12-Pulse Rectifier 6-Pulse Inverter
Water Cooling Thyristor Converter

TCR Thyristor Valves for SVC

TCR : Thyristor Controlled Reactor – SVC : Static Var Compensator

Nidec (Ansaldo) SilcoVar TCR
ETT Thyristor Valve Assembly
Up to 350 MVA / 35 kV

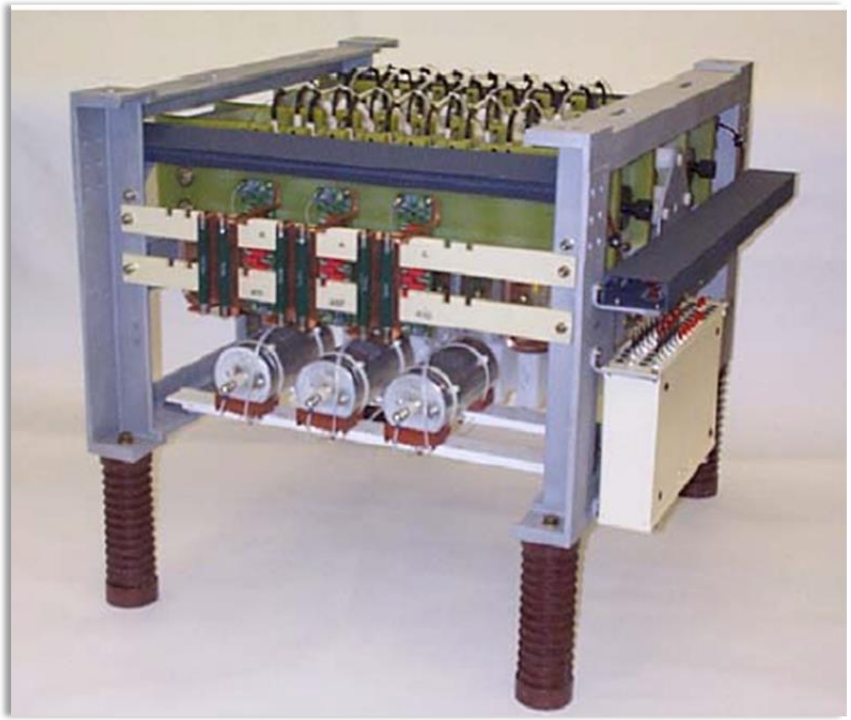

Siemens SVC TCR
LTT Thyristor Valve Assembly

ABB SVC TCR Veristack 100MVA/22kV
ETT Thyristor Valve Assembly

Thyristor High Current Rectifier

Applications : Electric Arc Furnace, Smelting, Electrowinning, Chlor-Alkali, Hydrolizer

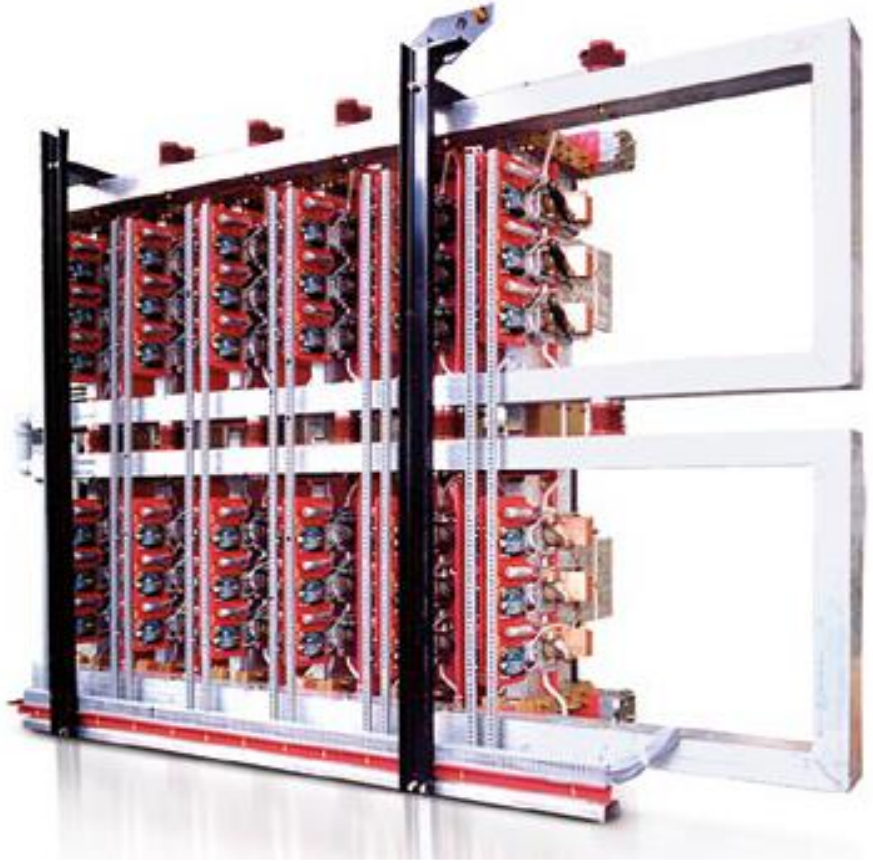

Nidec (Ansaldo) SilcoMax High Power Rectifier
Dual Deck 12-Parallel Thyristor 6-Pulse Rectifier

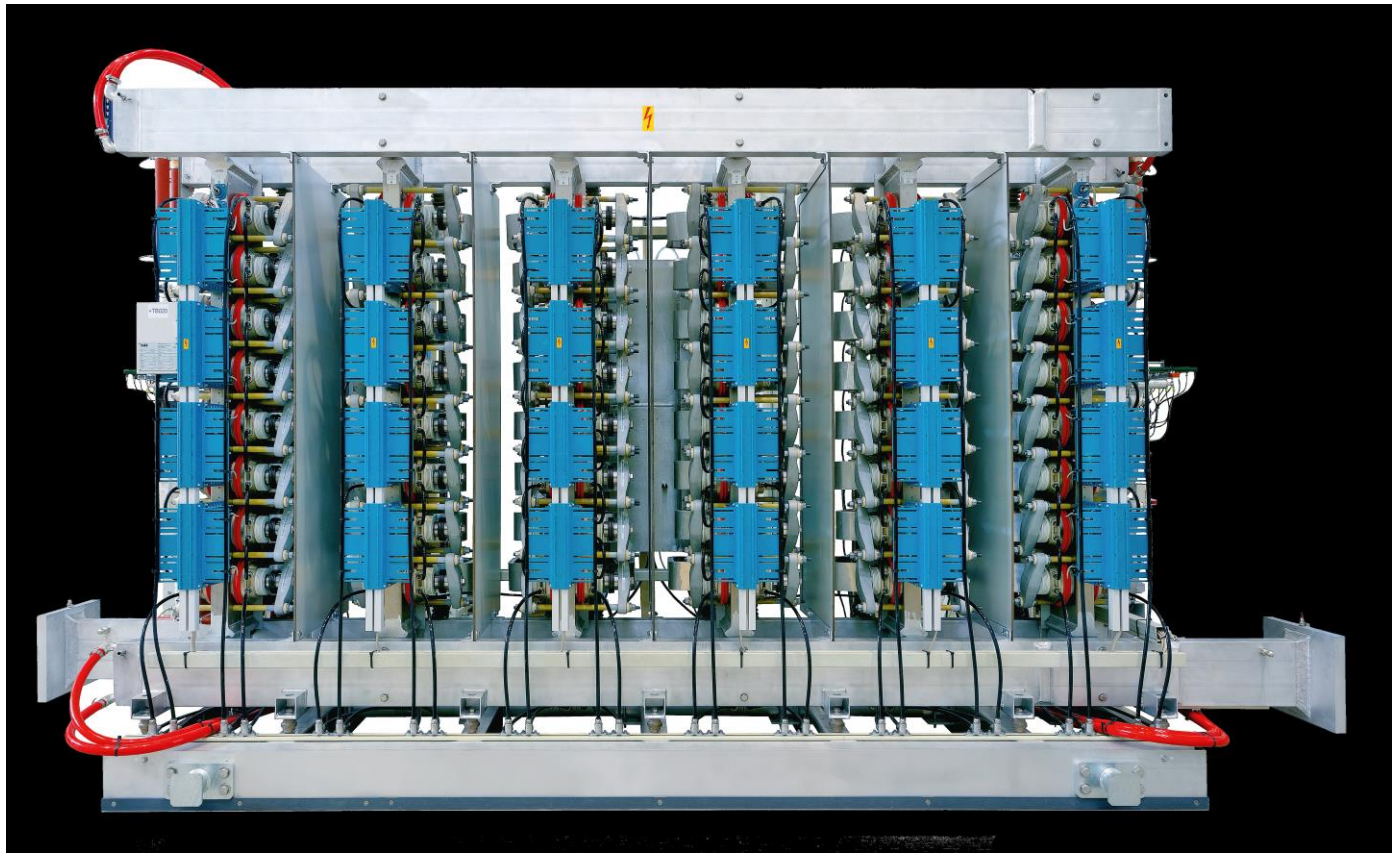

ABB HCR80000 High Power Rectifier
Dual Deck 16-Parallel Thyristor 6-Pulse Rectifier

Power Converter/Drive System Modernization

Stepwise approach

As a rule, it's not necessary to replace the comprehensive drive system all at once in order to achieve the upgrade of power converter/drive systems.

Many of the components can be re-used (special maintenance could be eventually required):

- ✓ Power transformers
- ✓ Panel cabinets and busbars
- ✓ Line reactors
- ✓ Main circuit breakers and contactors
- ✓ Power cables/bus-bars
- ✓ Power sections of the converters: i.e. Thyristors, heatsink, power assemblies and cooling units
- ✓ Electric motors, gears, couplings and accessories

Options to upgrade vintage Thyristor Power Converters and Drive Systems

- ➢ FCR – Firing & Control Circuit Retrofit
- ➢ Refurbish/Replace Thyristor Stacks
- ➢ Multi-parallel Thyristors upgrade to Single High-power Thyristor
- ➢ Complete Power Converter Revamping
- ➢ Substitution by New Technology : (IGBT/IGCT Drive + AC Motor, Baseplate, Gear, Coupling, Trasformer, Cables, Cooling…)

Power Converter/Drive System Modernization

High Power Thyristor Converter Modernization:

Some reasons and advantages behind a modernization job for existing Thyristor Power Converters :

- ✓ Unavailability of discontinued spare parts
- ✓ Minimize the risk of unplanned outages
- ✓ Reducing downtimes and costs due to maintenance and repair work
- ✓ Life cycle extension of existing drives/power converters
- ✓ Changing over to digital communication, to simplify operations and integration with automation and supervision systems - Worldwide support with remote access
- ✓ Modern extensive monitoring and diagnostic user-friendly tools
- ✓ Reliability and performance inproving
- ✓ Enhance control precision and process accuracy

FCR – Firing & Control Retrofit for DC & LCI Drives

DigiFCR-DC & DigiFCR-LCI Firing & Control Retrofit kit

- TMEIC-DC/LCI CTRe2 Microprocessor Control and Communication Board
- AMI AXIO I/O board and XID Extended Digital IO board
- AMI Smart Graphic Local Display
- AMI FOT/FOI Fiber Optic Pulse Tx/Rx Boards
- Firing Circuit Boards (mounted on SCR Power Cabinets)
- Load Unbalance Detection and Thyristor Monitoring Boards
- Line and Load Current/Voltage Monitoring Boards
- Earth Fault Monitoring Device and Safety Relay
- Remote I/O Modules for Auxiliaries Control/Protection

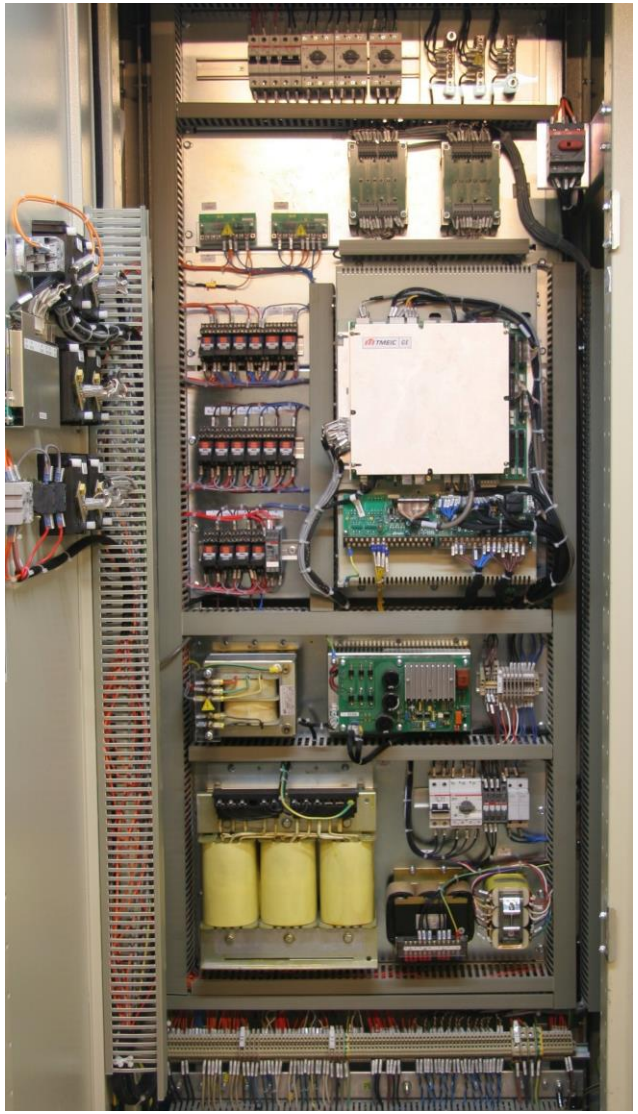

DigiFCR™ - DC Control Panel

FCR – Firing & Control Retrofit for DC & LCI Drives

Windows® based TMdrive Navigator® Maintenance & Engineering Tool

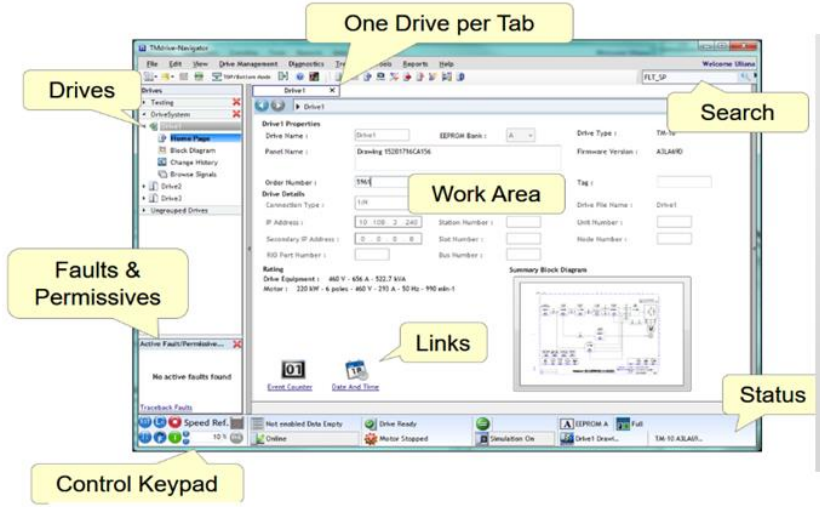

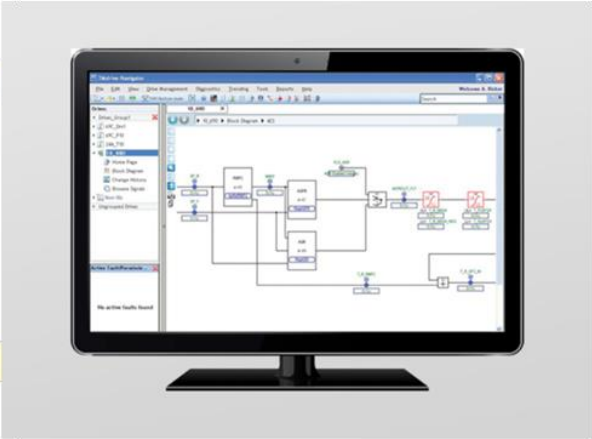

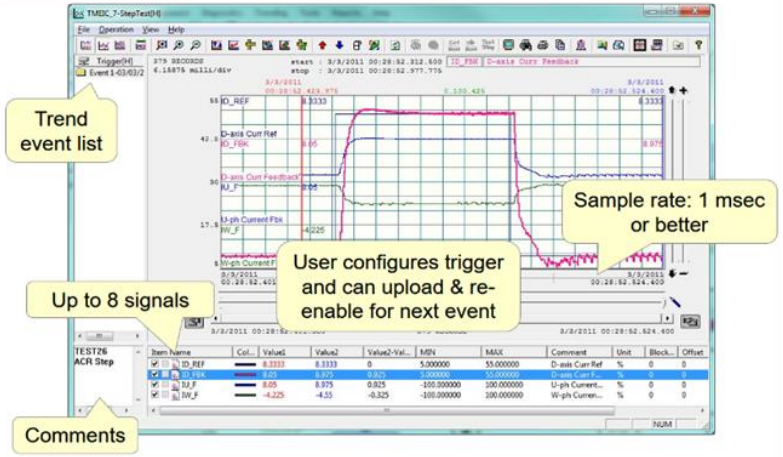

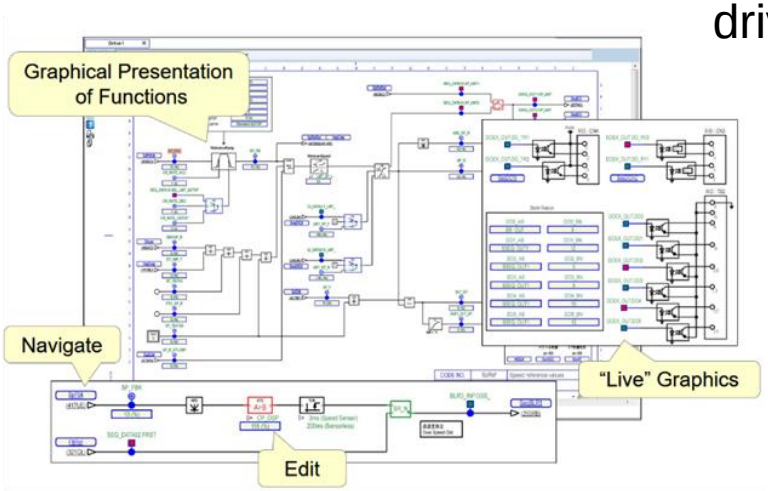

Control Software Library

- Animated graphic displays
- Integrated trending window
- Drivers for LAN-type communication
- Common Tool across all TMEIC drives

DigiDrive™ DC Power Thyristor AC/DC Converters

AMI-GPS Thyristor-Based DC Drives

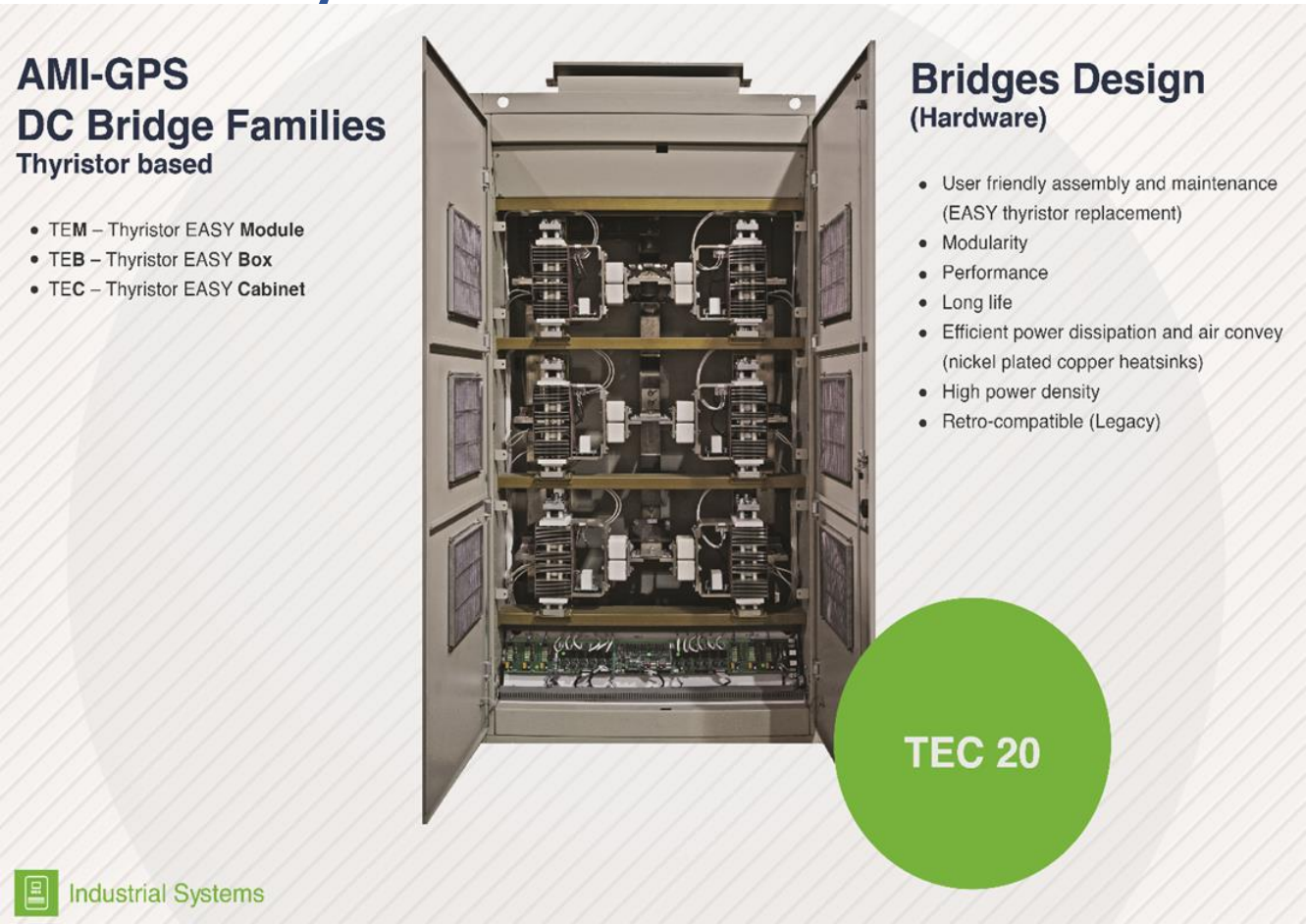

AC/DC 6-Pulse Bridge TEC Frames

- TEC 12 up to 2700 Adc
- TEC 15 up to 3500 Adc
- TEC 20 up to 4200 Adc
- TEC 30 up to 7250 Adc

Voltage range 400 to 1200 Vdc

DigiDrive™ DC Power Thyristor AC/DC Converters

DigiDrive™ Thyristor EASY Cabinet

DC Motor Drive - Thyristor Converter
TM-DCe2 control platform,
DC Current up to 7 kA (single bridge 6-pulse),
28 kA (multi-bridges 12-pulse),
Voltage range 400 to 1200 Vdc

Digi Drive® - DC Panel front view open door
6-Pulses Reversible Converter 3500 A 750Vdc
equipped with TECA22A Dual-SCR Modules

DigiDrive™ LCI (Load Commutated Inverter)

DigiDrive™ LCI Thyristor AC Synchronous Motor Drives

- TMEIC™LCIe2 Advanced Drive Control
- Configuration: 6 / 12 pulses
- Inherent Regenerative capacity
- Integrated Field Power Supply
- 10 MVA/15MVA @ 4160V
- 16 MVA/ 25 MVA @ 6900V
- Very High Efficiency
- Fuseless Thyristors
- Very High Reliability

TMV15 Module
1500 A / 4200 V

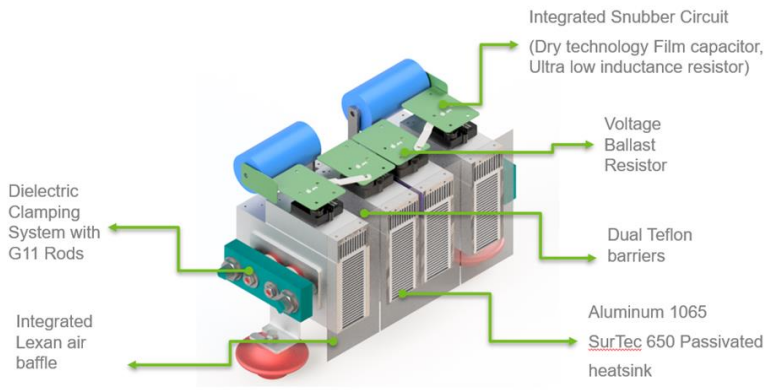

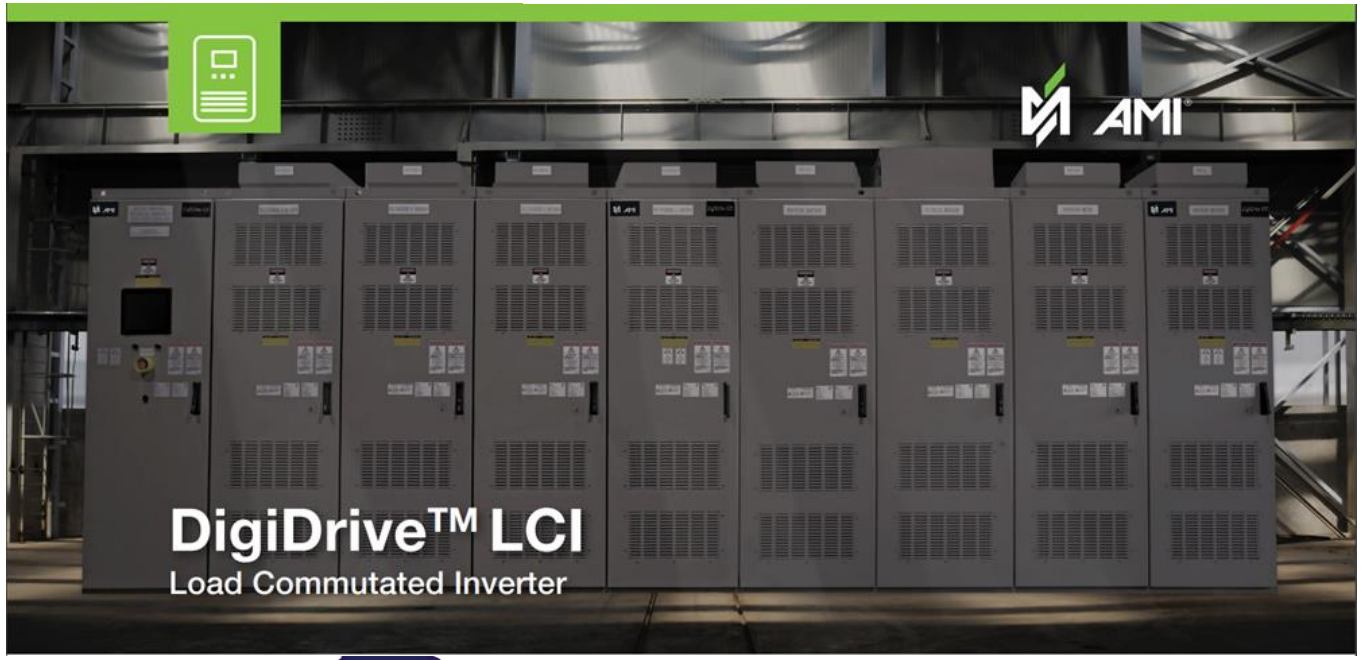

DigiDrive™ LCI (Load Commutated Inverter)

TMEIC™LCIe2 Advanced Drive Control – TMdrive Navigator

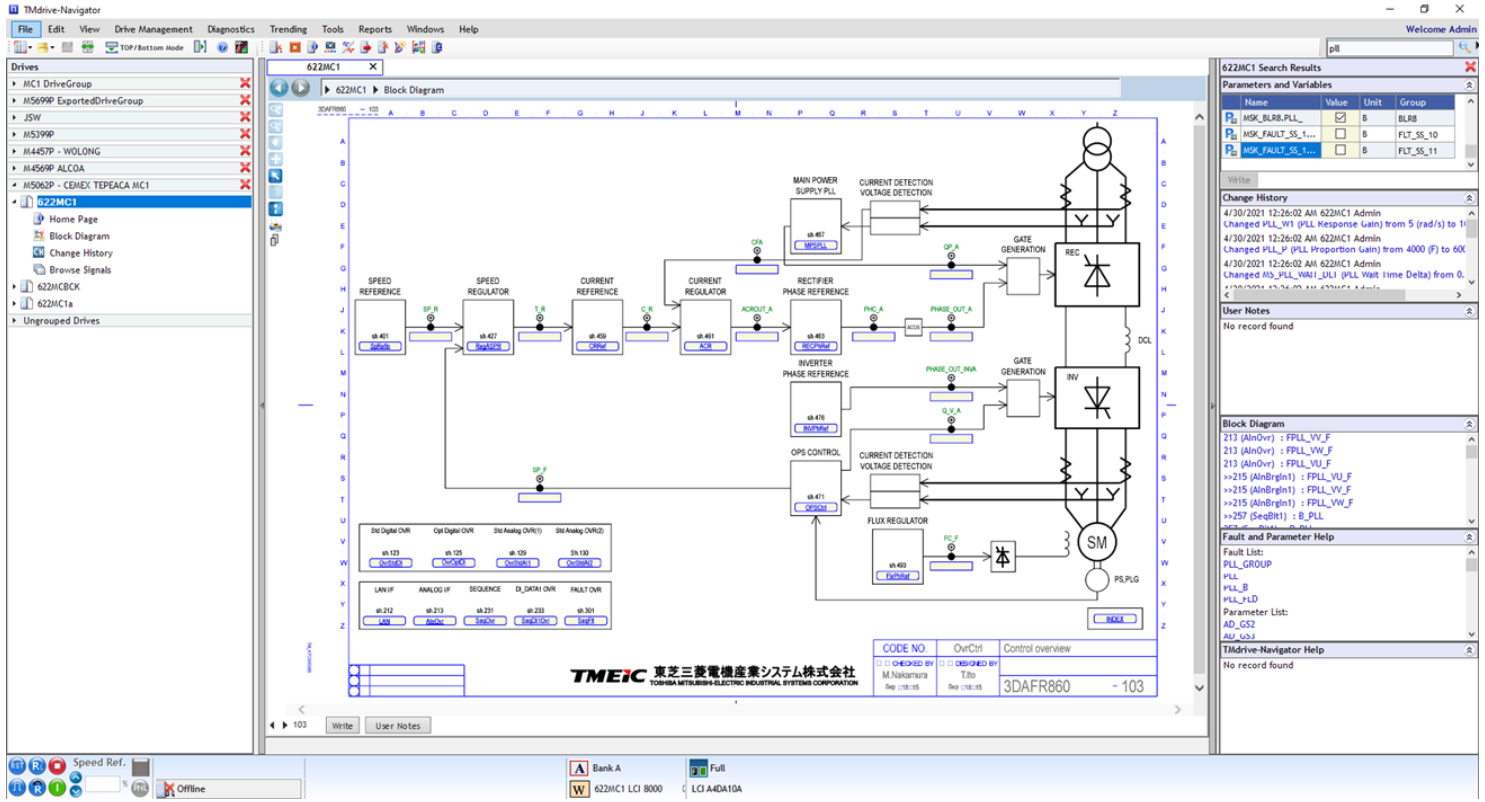

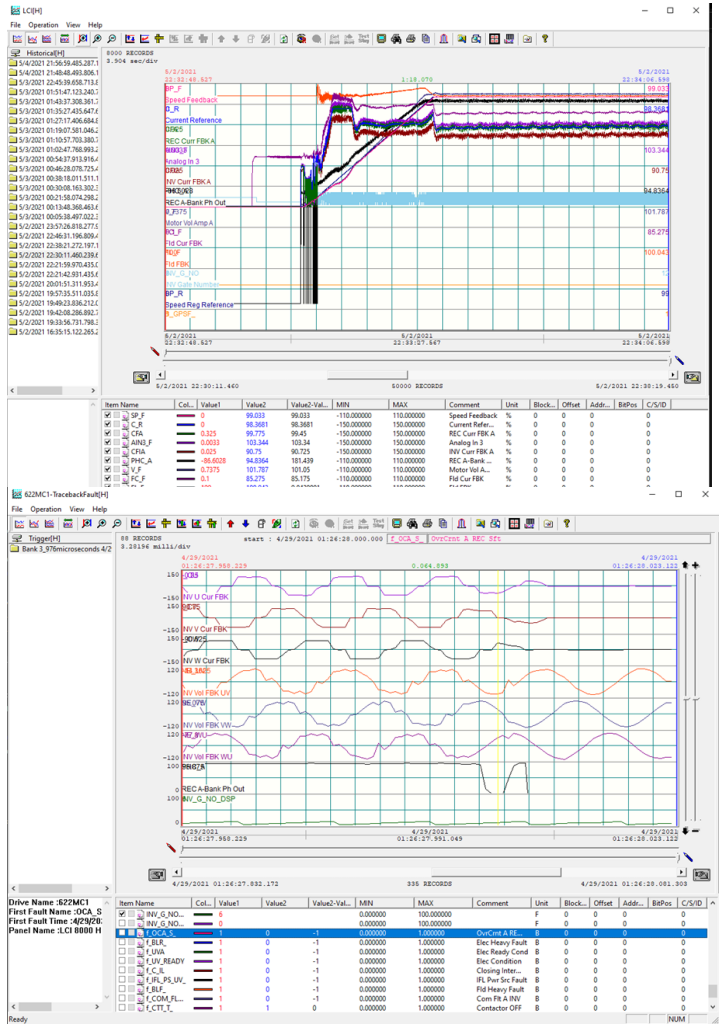

FCR – Firing & Control Retrofit

Success Story

HSM, RM Delivery Edger Drive – Qty 2 x DCM 885kW/225-530RPM/700Vdc/1385Adc
GE SILCO-2000 Drive Control Retrofit with DigiFCR-DC

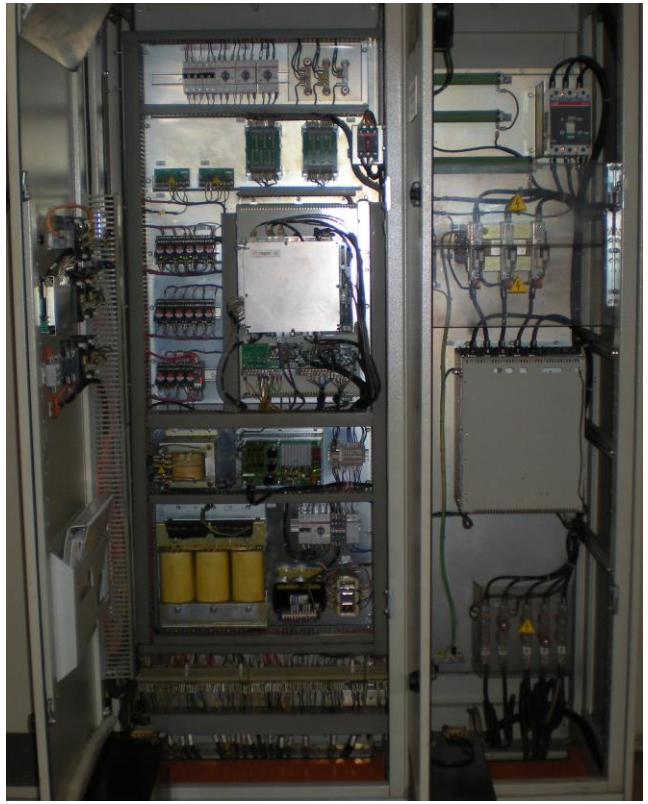

New Control & FEX Panel

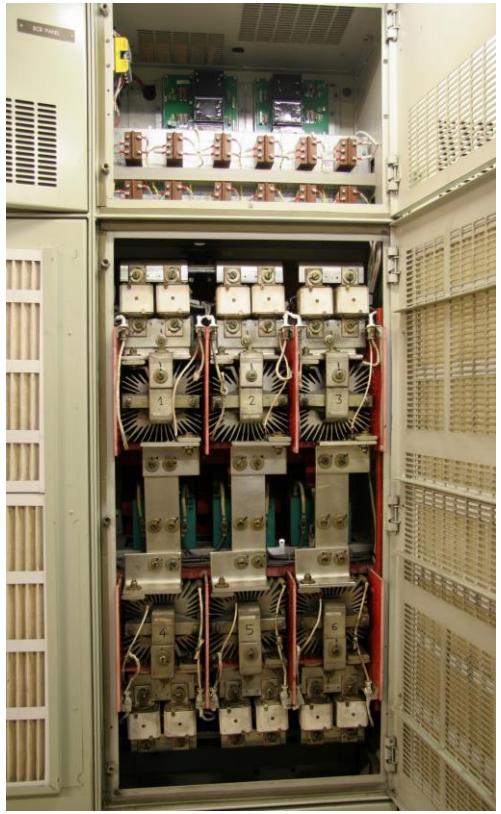

Reused Thiristor Bridge (1 of 2)

Reused Motor Line Panel

DigiDrive-DC Mill Main Drive Revamping

Success Story

DigiDrive™ - DC
Main Drive Application
DCM 6000Hp/700Vdc/6740A
12-Pulses AC/DC Converter
2 Parallel TEC-20 / 3900 Adc
750 Vdc Total 15600 A (Fwd)

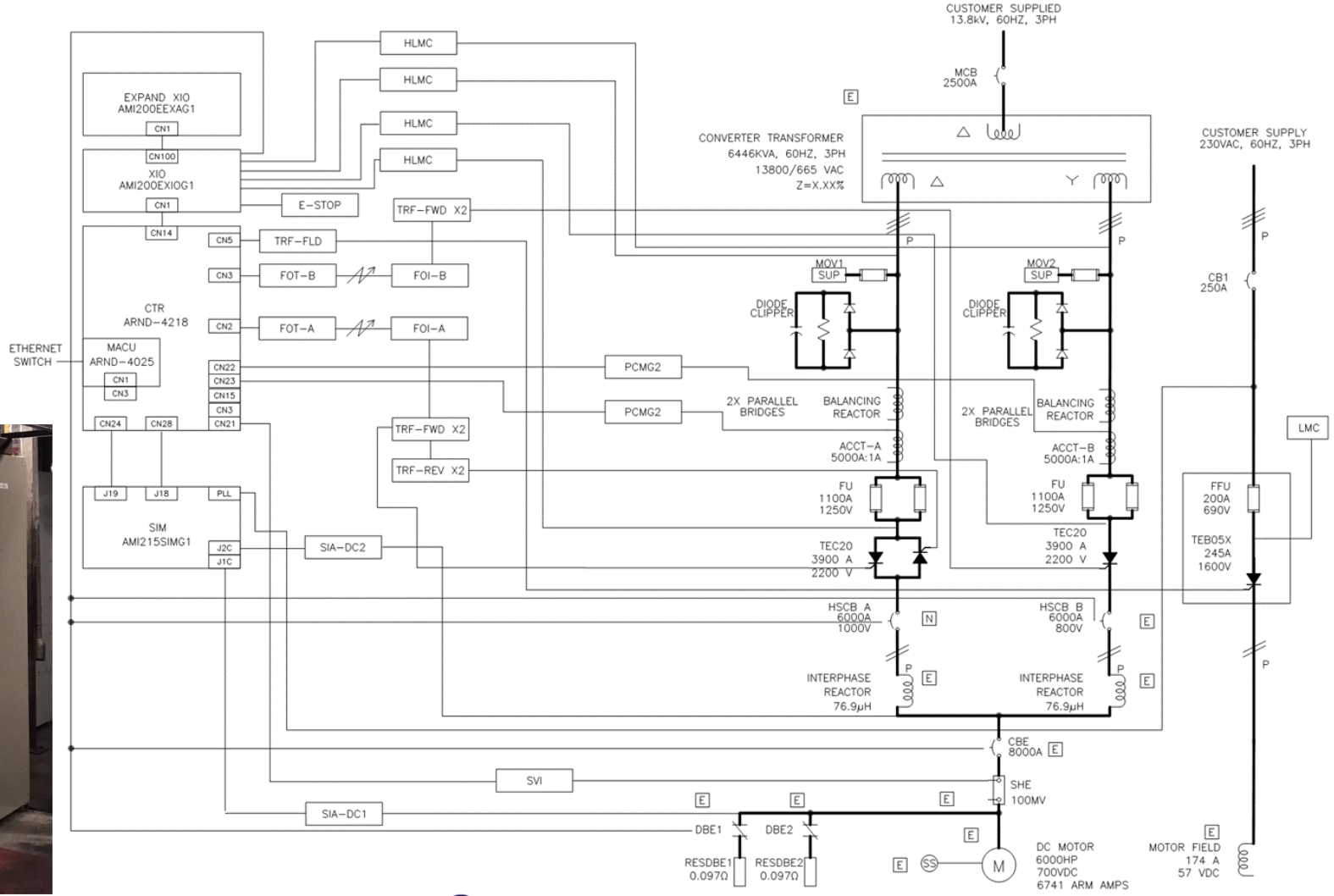

DigiFCR CYC / SVC / X4 Control Platform

EXC Platform – PXI Express Embedded High-Performance Controller

DigiFCR™ CYC/SVC/X3 Control System is a microprocessor-based drive and process controller with dedicated I/O system (National Instruments PXI platform) providing advanced control requirements, high dynamic performances for heavy industry main drives application, expanded diagnostic capability, control-redundancy option and various I/O interfaces and communication LAN.

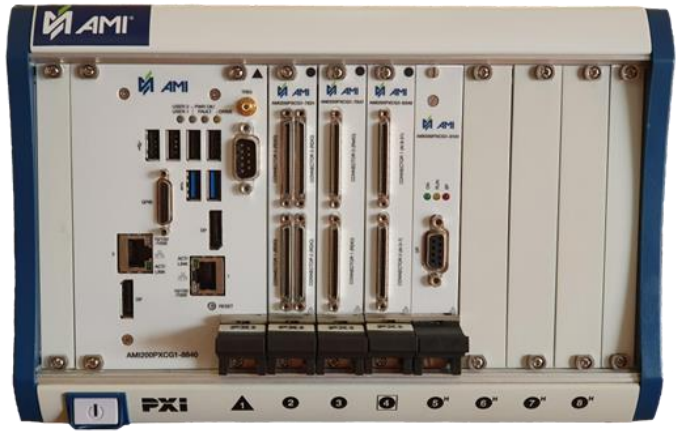

NATIONAL INSTRUMENTS

PXIe Embedded Controllers

Timing and Synchronization: PCI Express Gen 3

High-Performance Quad Core Controller

OS: Windows 10, LabVIEW Real-Time

FPGAs latest technology: Signal processing algorithms

HIGHER DATA THROUGHPUT

PCI Express Gen 3

PARALLEL TEST EXECUTION

Multicore Processors

MEASUREMENT ACCELERATION

FPGAs

INCREASED MEASUREMENT RANGE

ANALOG DEVICES AD9467

Data Converters

PROFINET® PROFIBUS® IEC 61850 Modbus EtherNet/IP

DigiFCR CYC / SVC / X4 Control Platform

EXC Platform – PXI Express Embedded High-Performance Controller – Smart Tool

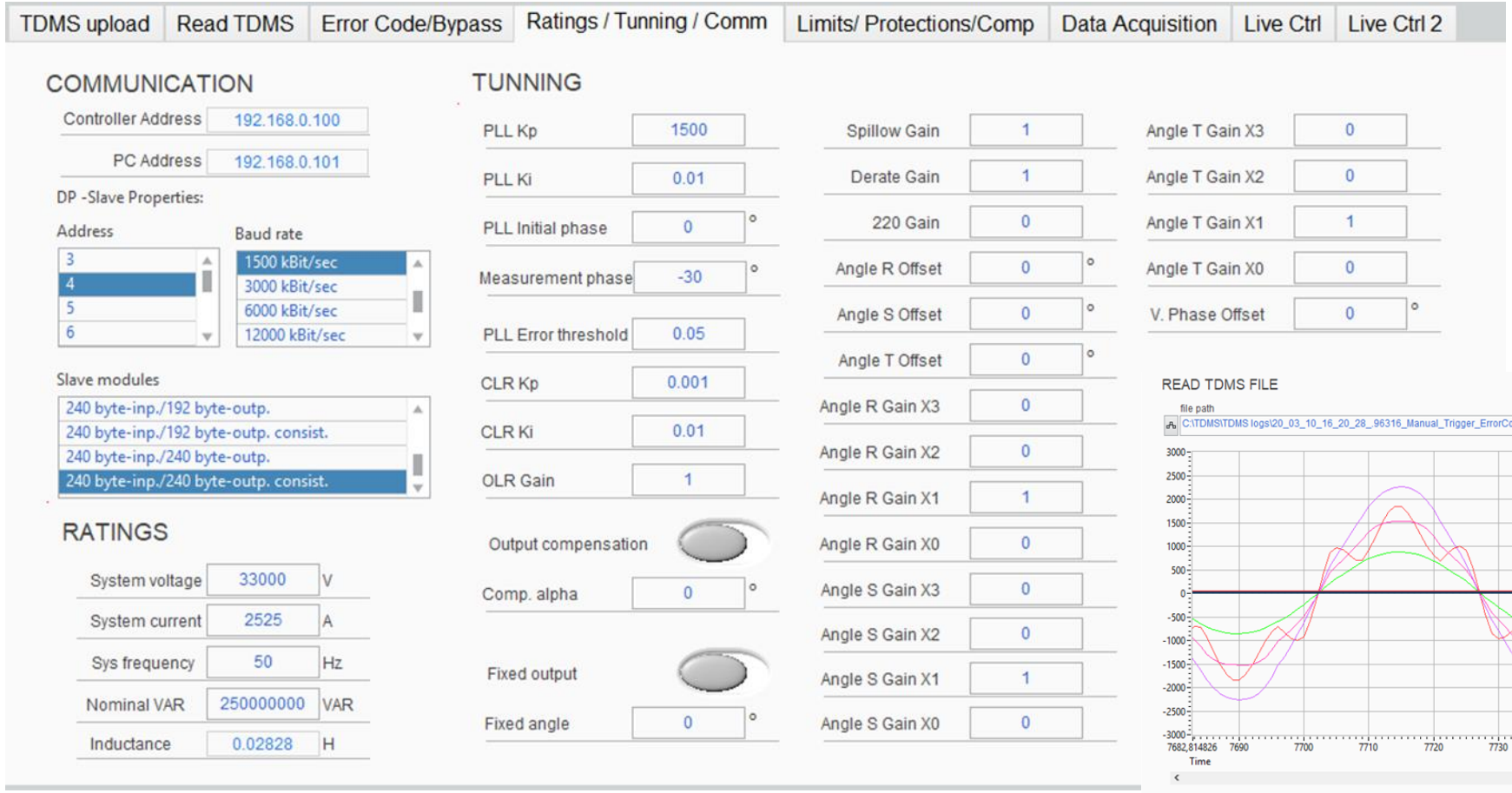

Alarms & Events

Historical Data /Live Trends

High-Speed Trend

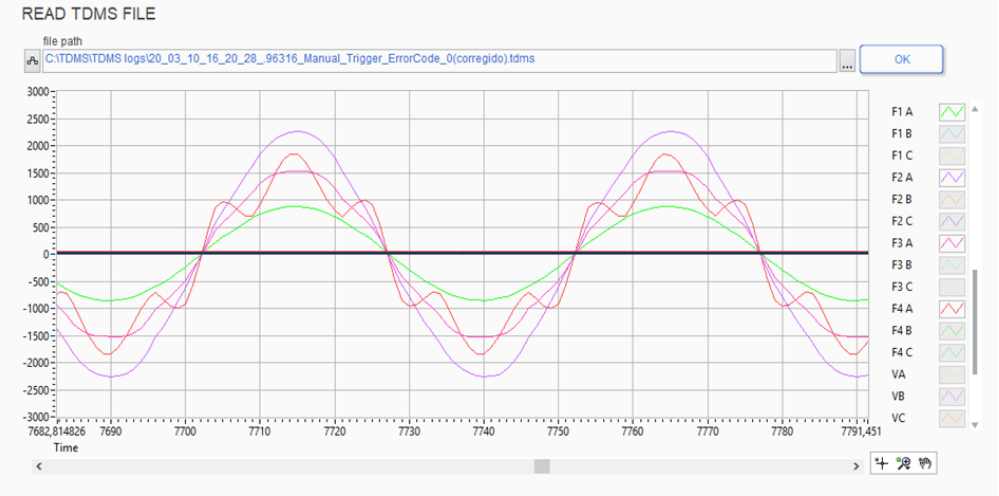

DigiFCR CYC / SVC / X4 - Phase Control Thyristor Technology

AMI220PXA: Firing/Monitoring/Protection Modular Solution for LTT-ETT-BCT Thyristors in High-Voltage/High-Power Applications & any Valve configuration (single, series, parallel)

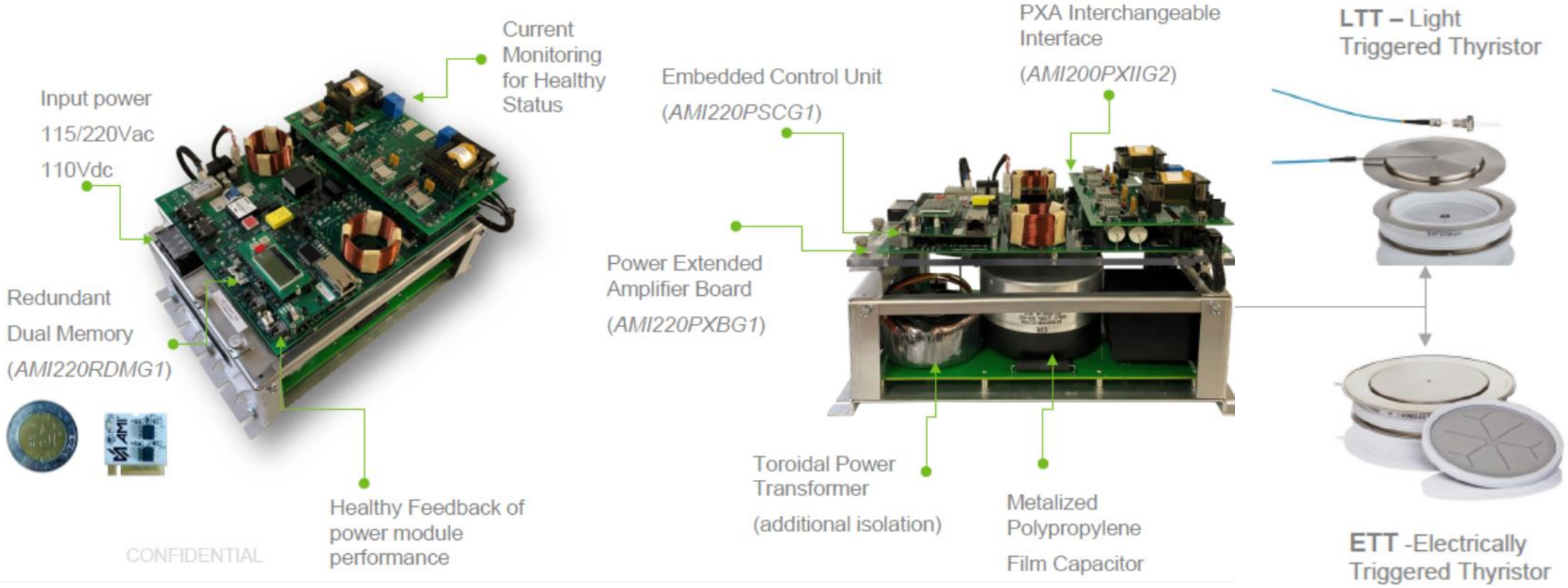

CONFIDENTIAL

DigiFCR CYC / SVC / X4 - Phase Control Thyristor Technology

Typical Firing Technologies: AMI220PXA

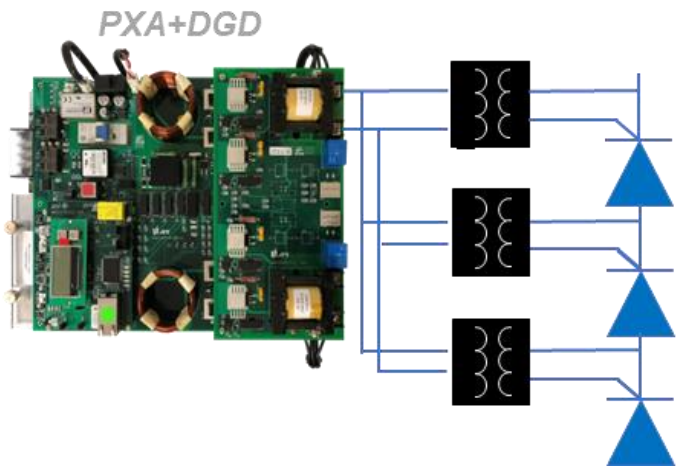

ETT Thyristors in Parallel

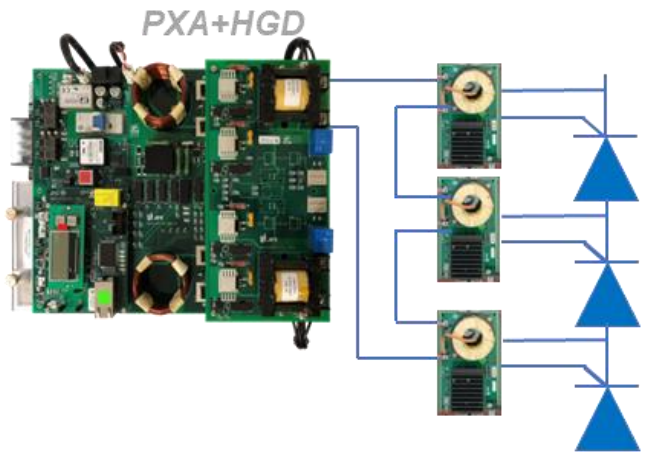

ETT Thyristor in Series

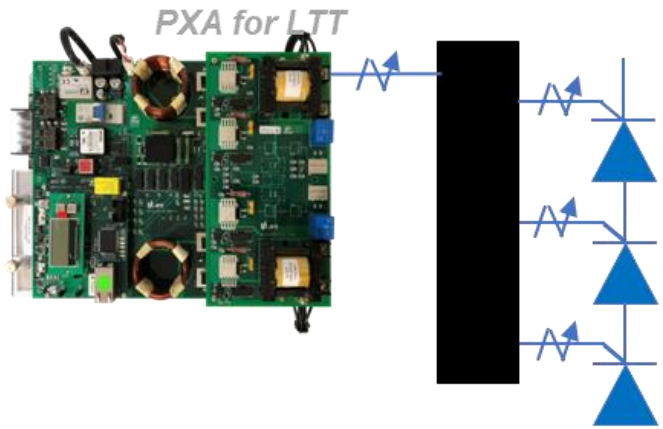

LTT Thyristors in Series

DigiFCR X4 - DC-EAF Power Rectifier

DigiFCR-X4 Topology & Features

The DigiFCR™ X4 Control of DC Electric Arc Furnace Rectifier

Designed to be the controller of medium to large complexity Thyristor Bridges with Advanced Control requirements, High-Speed Response,

Extended Diagnostic capability.

Fiber optic technology for firing commands that do not have any lag on the sequence and response.

Works together with DigitARC-PX3 Electrode Control or Stand Alone.

Rectifier Cooling system control (Optional).

Load balance Monitoring by Rogowski Coils CTs (Optional)

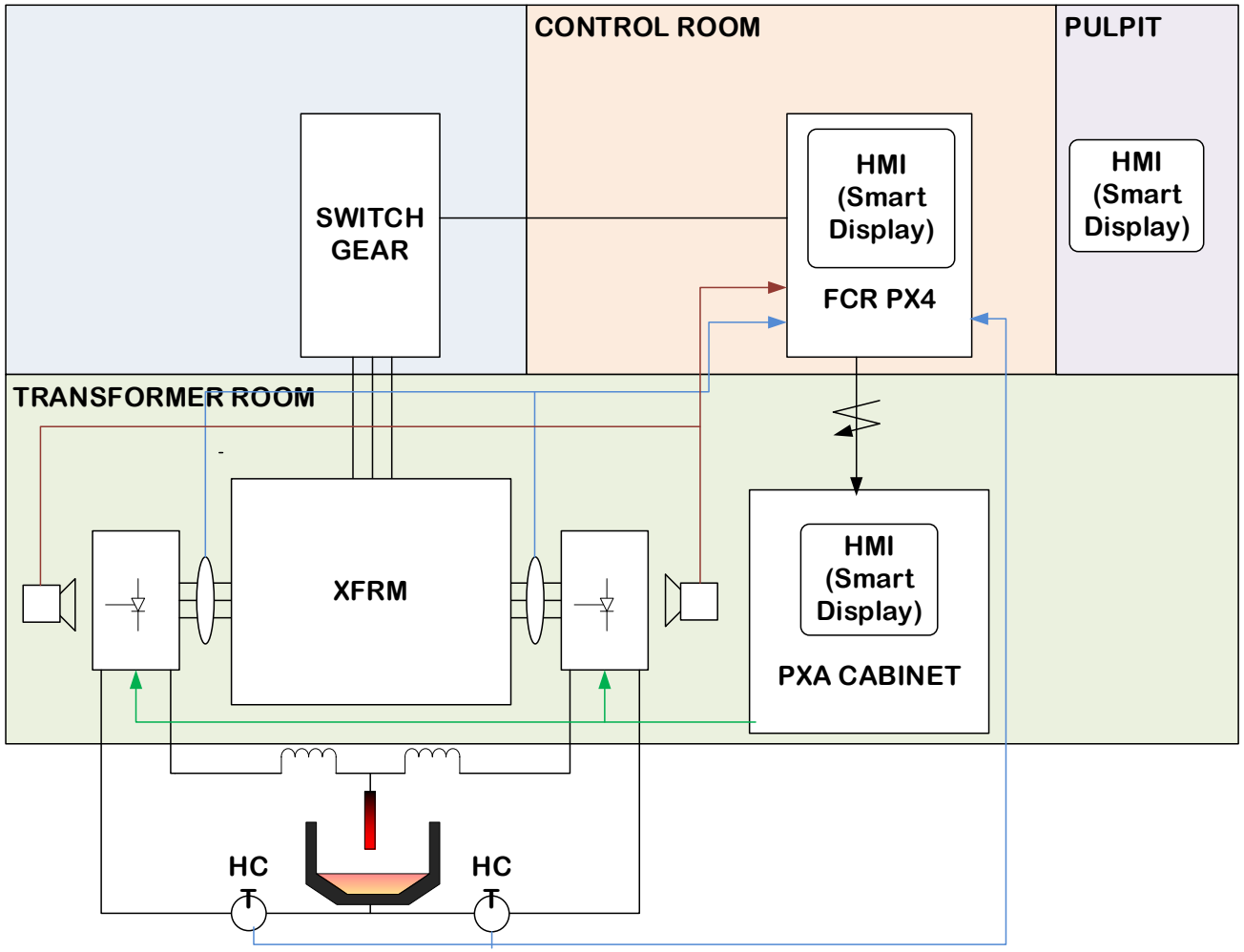

DigiFCR X4 - DC-EAF Power Rectifier

DigiFCR-X4 HW: Control Retrofit for Silcomax
2 x 12-Pulse/10-Parallel SCR (N+2), 140kA/1000V

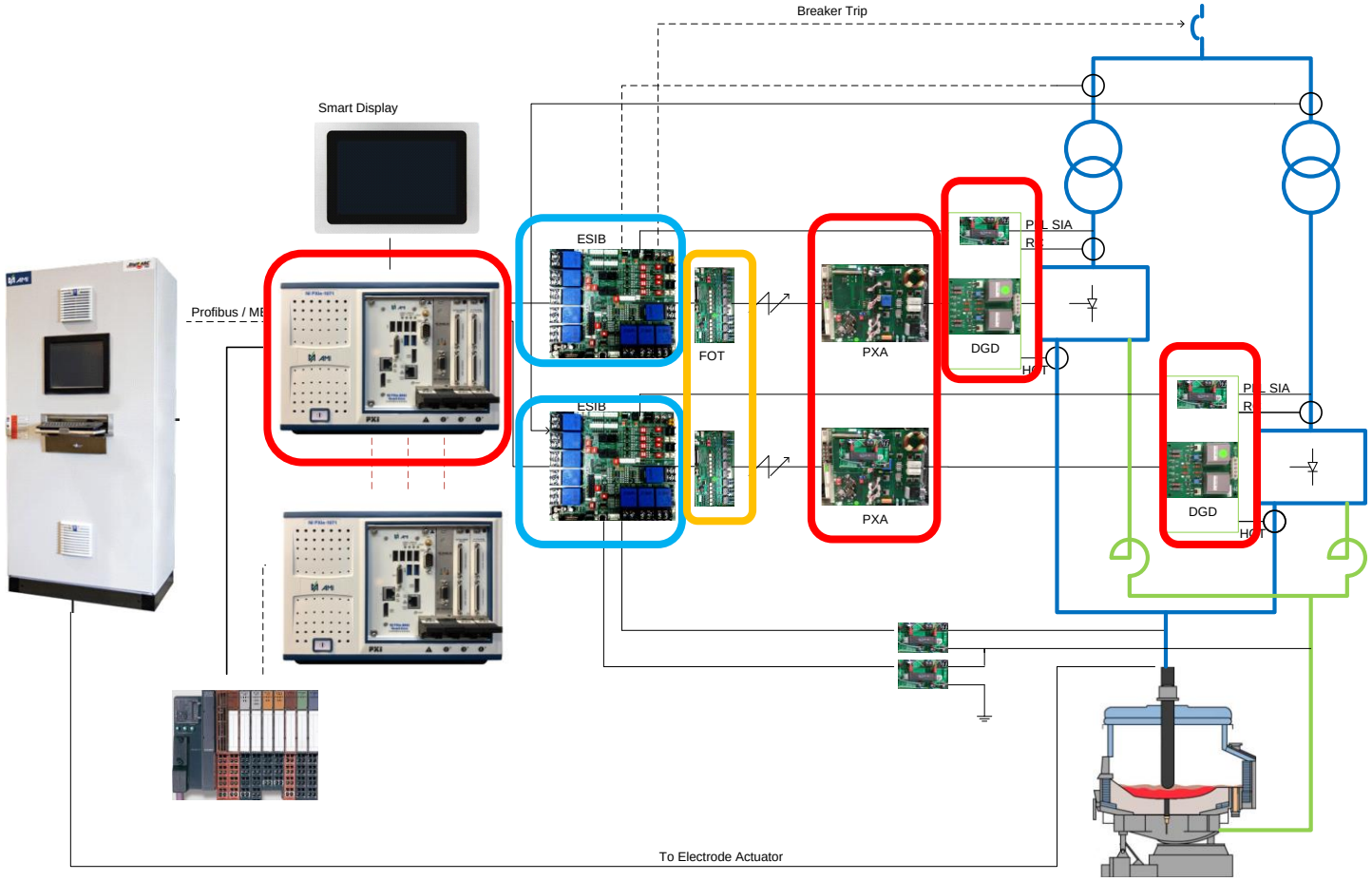

DigiFCR-SVC TCR - Thyristor Controlled Reactor

DigiFCR™ SVC Power Quality

- Unity Power Factor Achievement
- Harmonic Mitigation
- Voltage Fluctuation & Unbalance Limitation
- Flicker Minimization
- Balance Asymmetrical Loads

DigiFCR™ SVC Features

- Native coordination with **AMI SmartFurnace™**
- Highly-Customized for existent installations
- Extended Diagnostics
- Digital Flicker Measurement
- Control Algorithms:
  - Incoming Power Factor (in addition to SVC busbar)
  - Totalizer current calculation (no CT required).
- Short-Circuit Evaluation.
- Reduction of AC Voltage Unbalance.
- Harmonics Filters Current Monitoring/Protection

DigiFCR™ - SVC Control Panel

DigiFCR-SVC TCR - Thyristor Controlled Reactor

DigiFCR™ SVC Semplified Control Layout

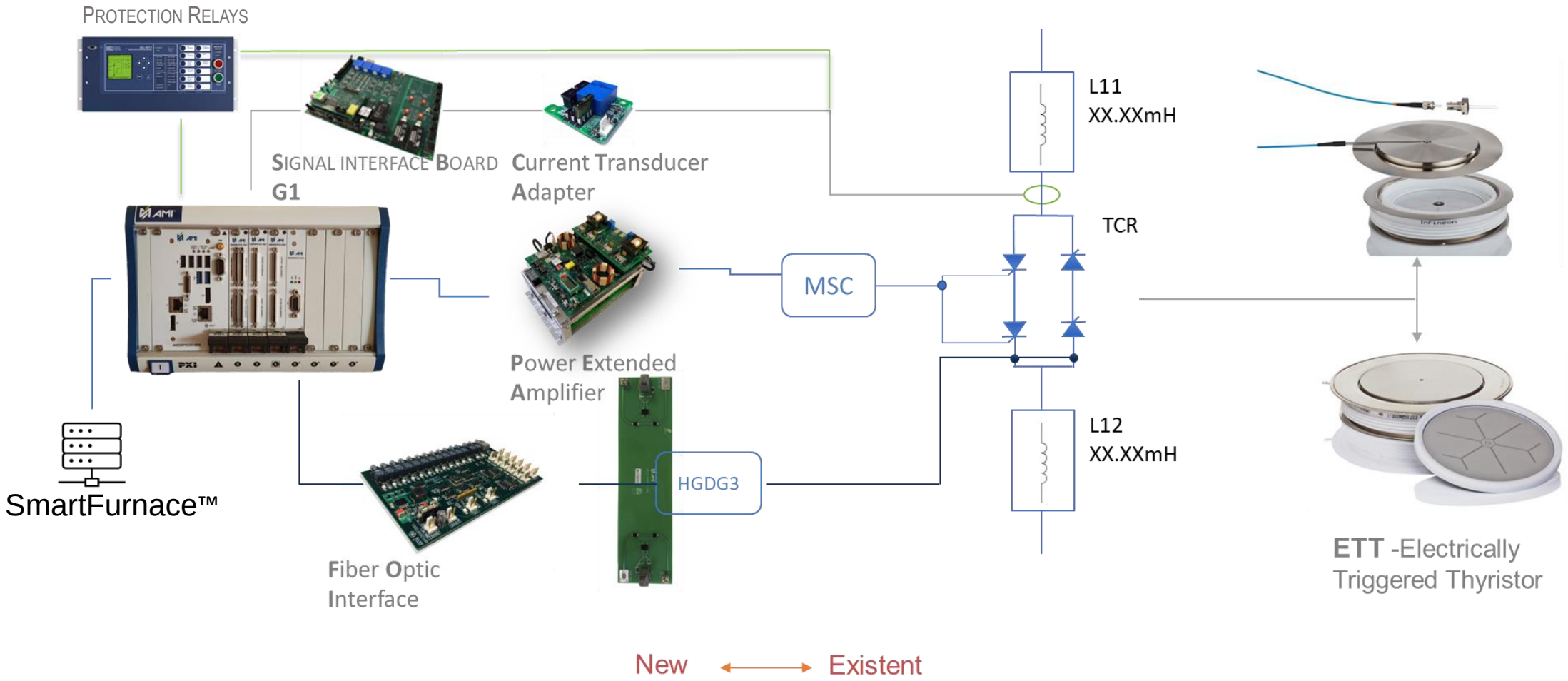

DigiFCR-SVC TCR - Thyristor Controlled Reactor

Typical Application – Static VAR Compensation for AC EAF / LF (250 MVA)

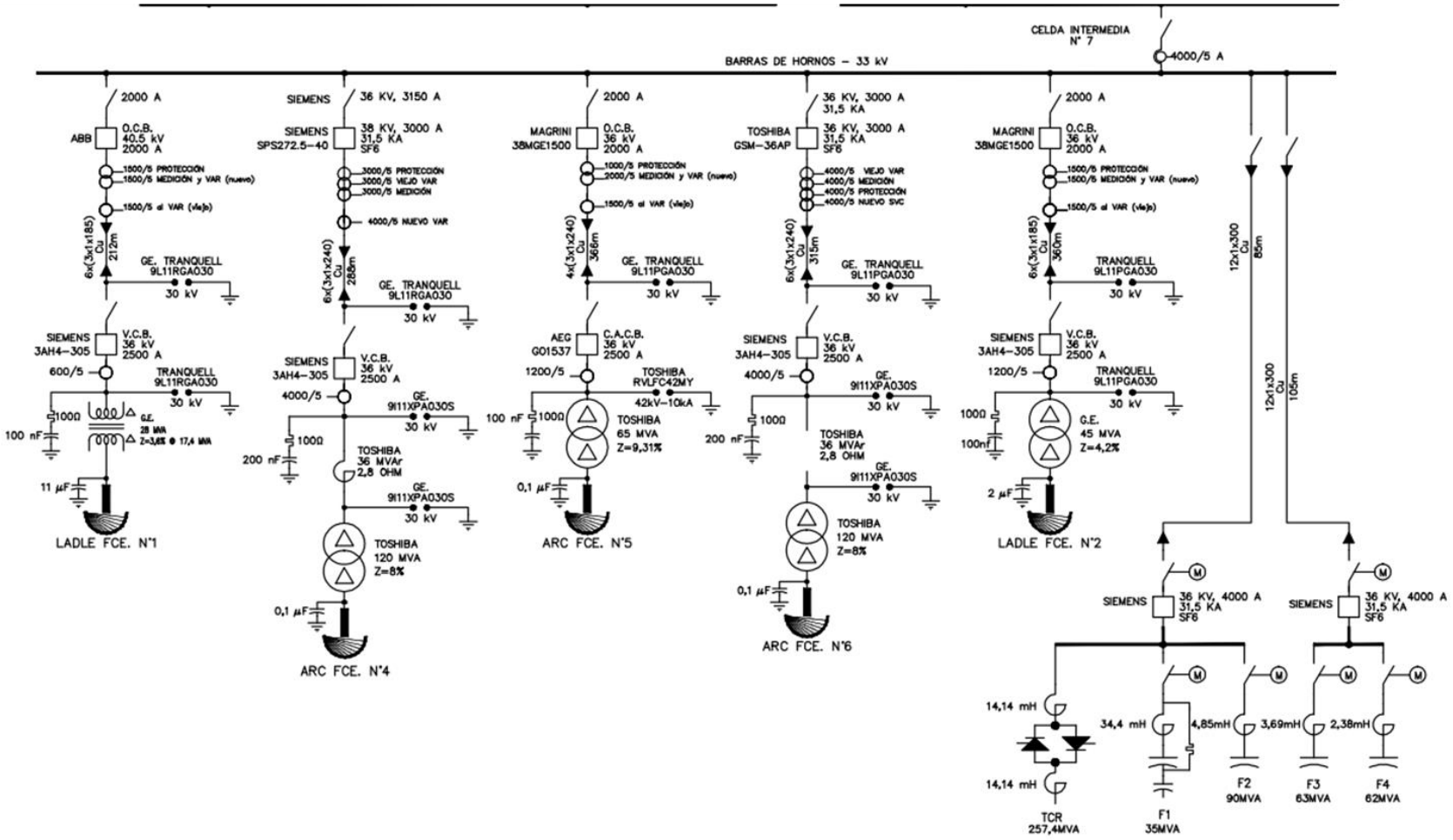

DigiFCR–CYC Thyristor Cycloconverter Drive

Cycloconverter Drive Topics

Equipment:

- ✓ MV-ACB
- ✓ Transformers
- ✓ 3 x 6-Pulse SCR Converter
- ✓ HSCB-DC
- ✓ AC Motor

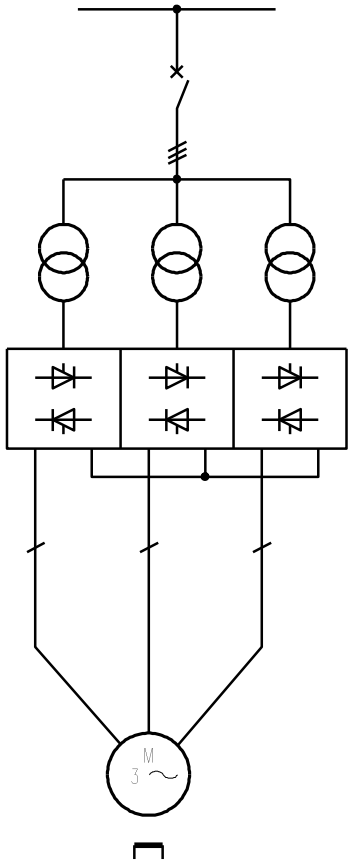

NCC Simplified Layout

- Direct Frequency converter, without energy storage
- Controllable Output Voltage / Frequency
- Input Frequency 50 or 60 Hz ± 10 %
- Output Frequency range 0...20 / 24 Hz
- Speed range - 100 %...+ 100 %
- Bidirectional/Regen Converter
- Non-Circulation Current or Circulation Current
- 6-Pulse/36-Arm, 12-Pulse/72-Arm
- Typical power range
  - Low voltage 1kV 1...10 MW
  - High voltage 2.4kV up to 6.6kV 5...30 MW

DigiFCR-CYC Thyristor Cycloconverter Drive

DigiFCR™ CYC – Retrofit Application

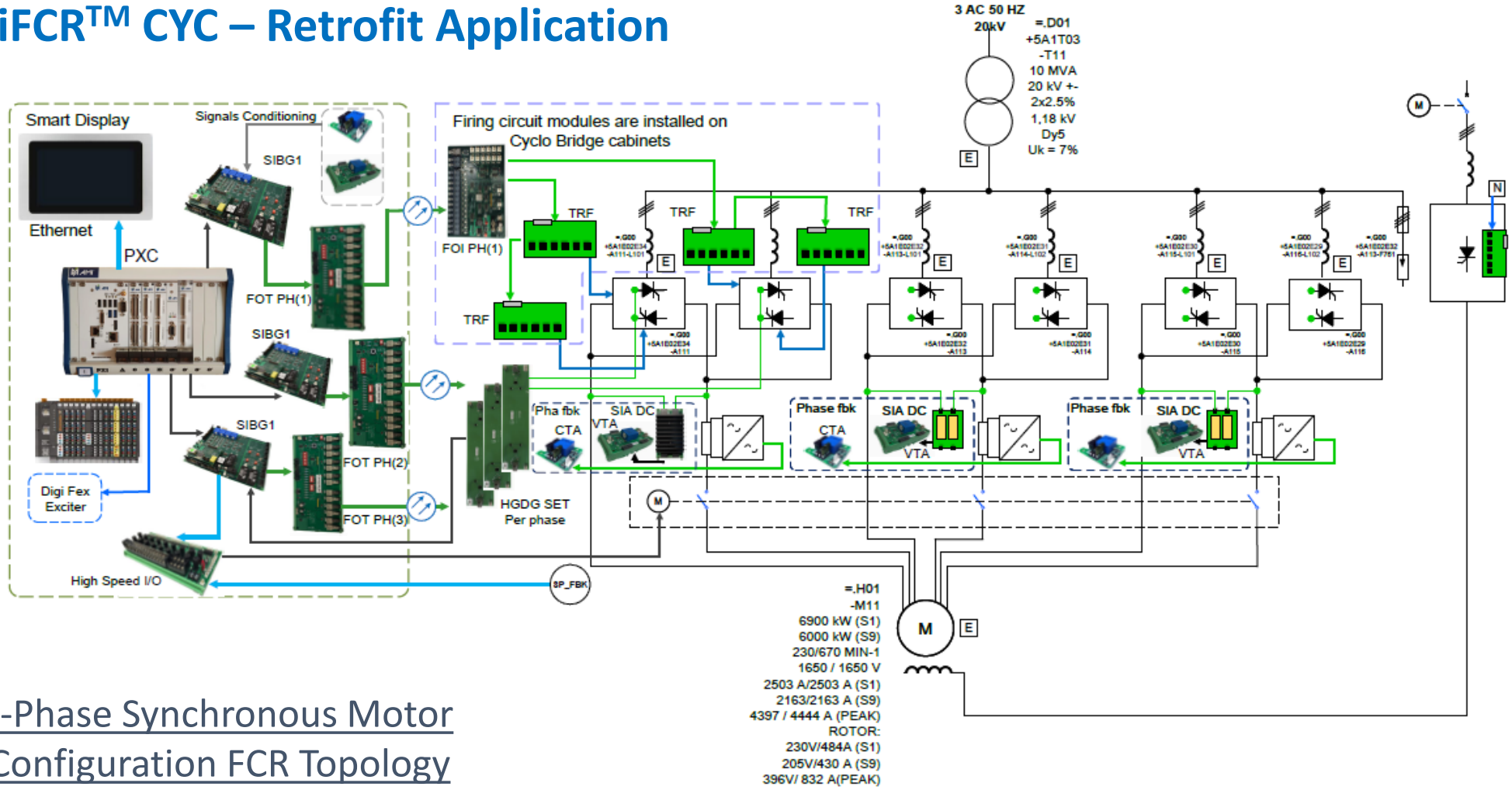

Open-Phase Synchronous Motor

NCC Configuration FCR Topology

Angelo Odone
Senior Application Engineer

P +39 (011) 988.2251
C +39 (345) 172.2534
angelo.odone@amiautomation.com

Green Power Solutions S.R.L
Strada Commenda 2/B 10072
Caselle Torinese (TO) Italy
Technology Partner of
AMI Automation

Industrial Systems

24 hour technical support: Mexico 01 800 286 9358, United States +1 (956) 217 0525

THANK YOU!

AMI Automation Mexico (Headquarters)

Blvd. Diaz Ordaz #402, Col. Rincón de Santa María,
Monterrey, Nuevo León, Mexico 64650
info@amiautomation.com
T. 52 (81) 1001.4050
https://www.amiautomation.com/

Green Power Solutions

Strada Commenda 2/B
10072 Caselle Torinese TO, Italy

angelo.odone@gpsemi.it

www.gpsemi.it

+39 345 1722534

+39 011 9882251