Green Power Solutions

Motor Current Diagnostic devices

Alessandro Cavallo – Ghisalba S.p.A.

Giovanni Matarrelli – Ghisalba S.p.A.

GPS Tech Seminar 2023

Summary

- Overview on the use of current control device on direct on line starter
- Digital Diagnostic Motor Protection – DDMP
- Digital Diagnostic Motor Protection with COMunication module –DDMP-COM

INTRODUCTION

- Main characteristics of standard thermal overload relais:
  - Based on low precision bimetal technology
  - One trip class only
  - Short current range control
  - Long time trip in case of loss of a motor phase
  - No detection of current asimmetry
  - No indication of the reason of the failure
  - No tele-reset
  - Need of external PTC controller (if necessary)

INTRODUCTION

- Main characteristics of standard electronic overload relais:
  - Based on direct analsys of the current with the use of C.T.
  - Multiple trip classes choice
  - Short time trip in case of loss of a motor phase
  - No detection of current asimmetry
  - No indication of the reason of the failure
  - No tele-reset
  - Need of external PTC controller (if necessary)

INTRODUCTION

- Ghisalba designed a solution that should be considered something more than a standard overload relay that is based on different customers requests:
    - All the characteristics of thermal and electronic overload relay
    - PTC control
    - Tele reset / Remote reset / Auto reset
    - Clear indication of the reason of the trip of the device

DDMP

Digital Diagnostic Motor Protection

Not a standard overload relay!

DDMP

Digital Diagnostic Motor Protection

- Developed for harsh environments: naval, military, mining
- RINA approved for use in naval environment
- Operating temperature -25<t<55°C
- Humidity up to 92%
- Designed to comply with IEC60092-504 EMI standards

DDMP

Digital Diagnostic Motor Protection

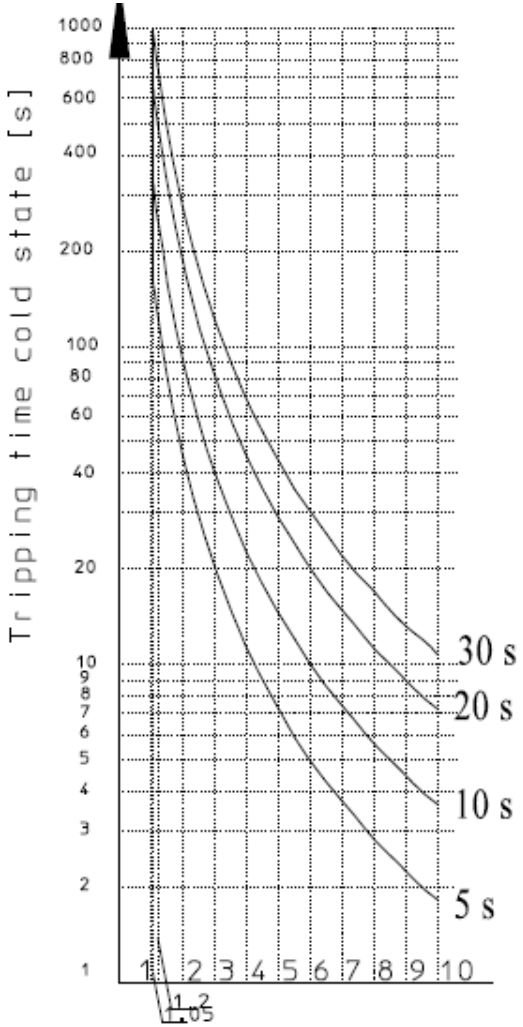

Tripping classes selectable for:

- **Standard motors: class 5 – 10 seconds**
- **Heavy starting engines: 20 – 30 seconds**

DDMP

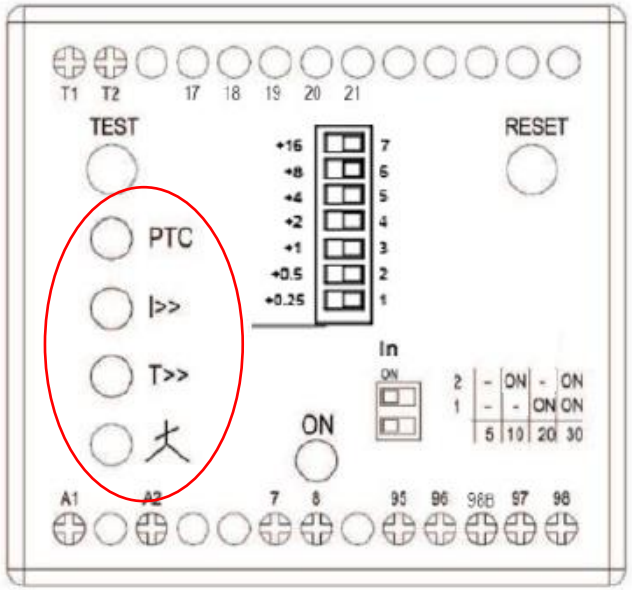

Four luminous indications with ultra-bright LEDs

- **Overcurrent (blinking over 1.2 In)**
- **Lack of phase / asymmetry**
- **PTC shot / cto cto PTC**
- **Engine heating/cooling status**

In the event of a failure, the maintenance technician will thus have immediate confirmation of the cause of the failure, reducing the repair time.

The signaling is maintained until reset by the maintenance technician even in the event of a power outage to the panel

DDMP

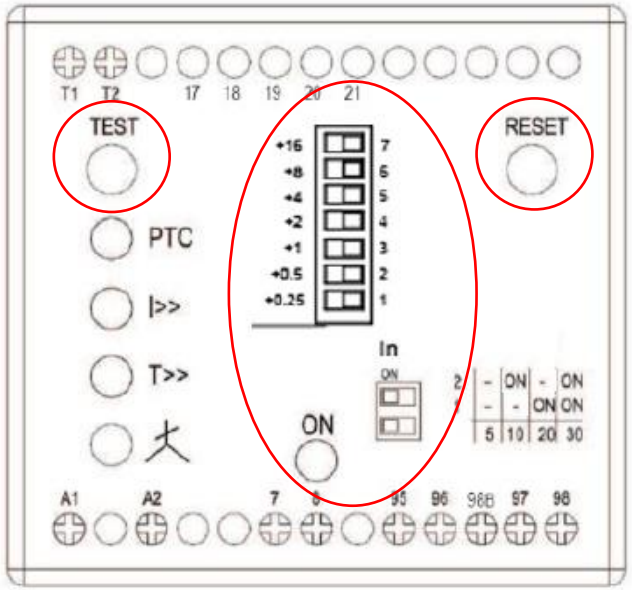

- Front panel for setting the motor current and trip class (dip-swithes).
- Minimum accuracy: 0.25A for currents up to 63A
- Possibility of manual, remote or automatic reset
- Test button to check the correct functioning of all functions

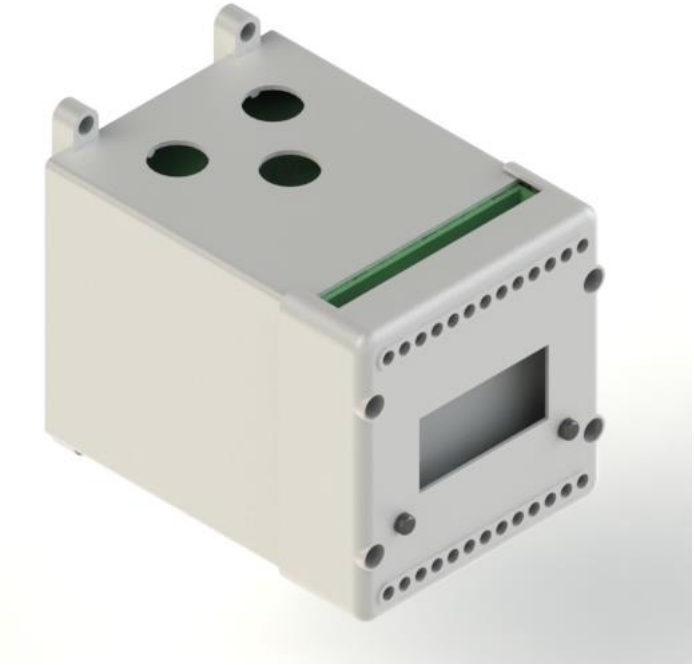

DDMP-COM

Digital Diagnostic Motor Protection with COMunication module

The evolution of DDMP!

DDMP-COM

Digital Diagnostic Motor Protection with COMunication module

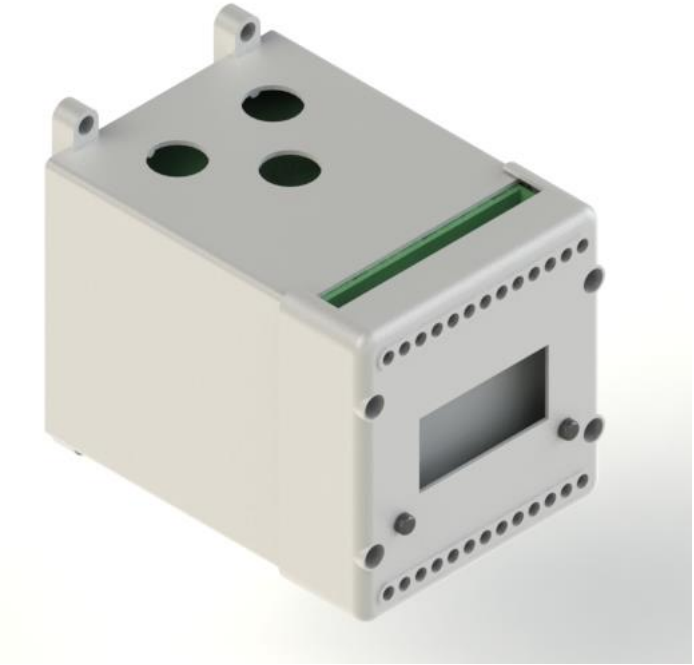

- Same overall dimensions and fixing of DDMP
- Same feature of DDMP
- Programming / reading via display485 serial communication (MODBUS)
- Reporting of two external contacts state
- Naval approval in progress

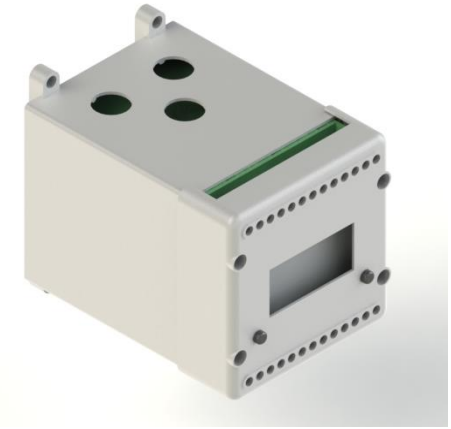

DDMP-COM

Programming via display of the following parameters:

- **Tripping class (if set)**
- **Motor current (if set)**
- **SettingEnable PTC control**
- **MODBUS RTU enabling-parameterization**

<u>The parameters can be protected by password to avoid modifications by unqualified personnel</u>

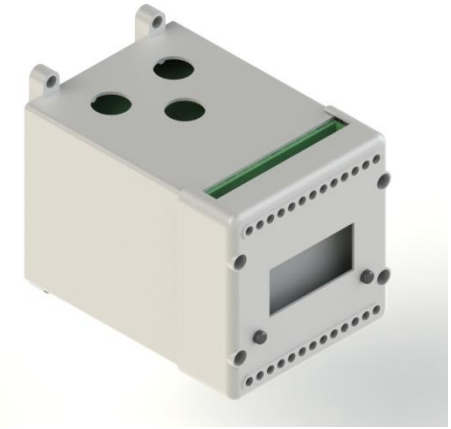

DDMP-COM

Alarms available for reading:

- Current overload
- Phase failure
- Current asymmetry
- PTC trip (if set)
- PTC shorted (if set)
- Reporting of two external contacts state

Data available for writing:

- Remote reset
- Motor current setting (if set)
- Trip class setting (if set)

DDMP-COM

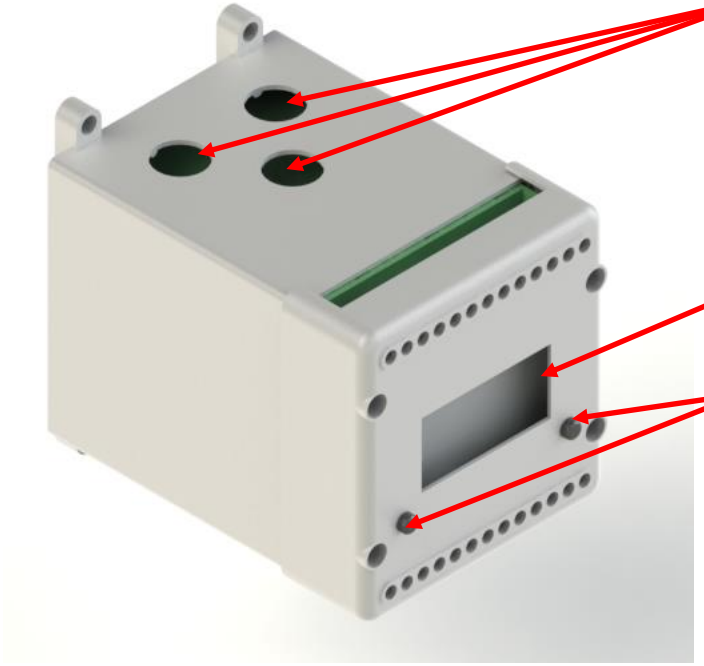

Connection with pass-through current transformers for direct cable passage.

Display LCD

Three control buttons (UP/DOWN/MODE for all the setting)

Possible connection with an external CT by setting the CT ratio on the DDMP menu

THANK YOU