Green Power Solutions

Bar-clamp e box-clamp GPS

Alessandro Panero – GPS

GPS Tech Seminar 2023

Necessary technical requirements

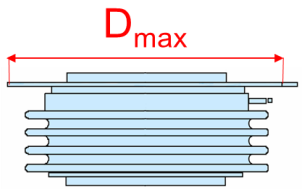

Maximum diameter

Temperature

Maximum Current

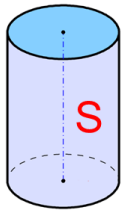

Overall Height

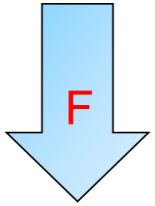

Compressive force

Peak Voltage

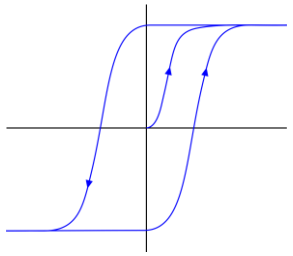

A-Magneticity

Weight

Bar clamp

Bar Clamp disc component compressions are used for one-sided or double-sided cooling.

Green Power Solutions offers the widest range of Bar Clamps available on the market today.

They are divided into two large families:

- **Bar Clamp Type F (Flat Head pressure pad)**
- **Bar Clamp type R (with Pivot Point)**

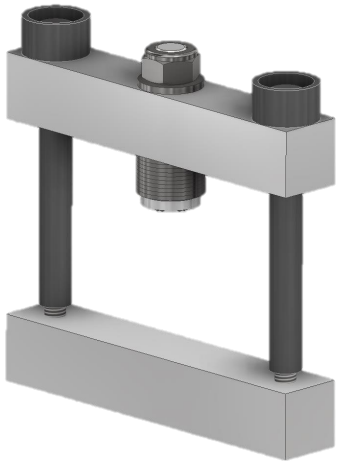

Bar clamp type F

Standard interaxis [mm]:
70, 79, 89, 102, 118, 130, 140, 150, 180

Compressive forces from 5 kN to 110 kN

Working temperatures up to 240 °C

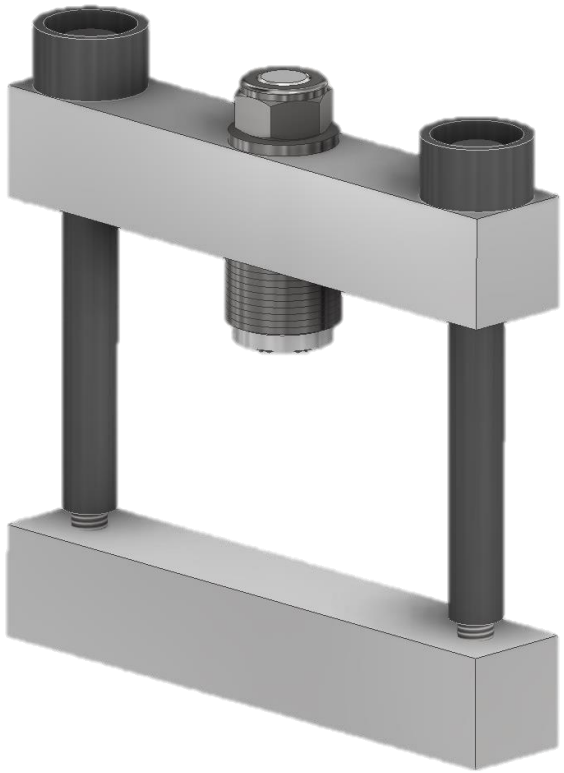

Bar clamp type R

- **Standard interaxis [mm]:**

  70, 79, 89, 102, 118, 130, 140, 150, 180

- **Compressive forces from 5 kN to 65 kN**

- **Working temperatures up to 240 °C**

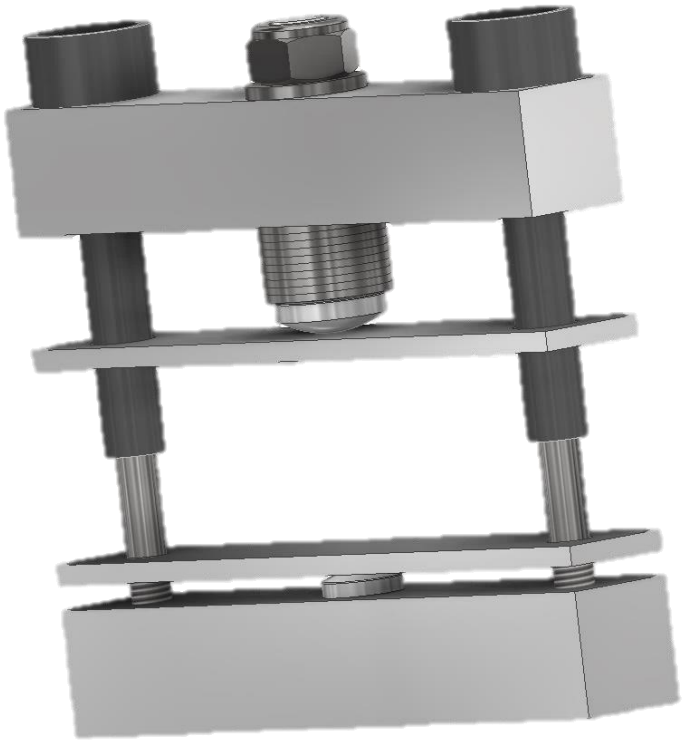

These two families are divided into 4 Configurations:

- **BN** = Normal Configuration with Reaction Bar
- **BR** = Inverted Configuration with Reaction Bar
- **SN** = Normal Configuration Without Reaction Bar
- **SR** = Inverted Configuration with Reaction Bar

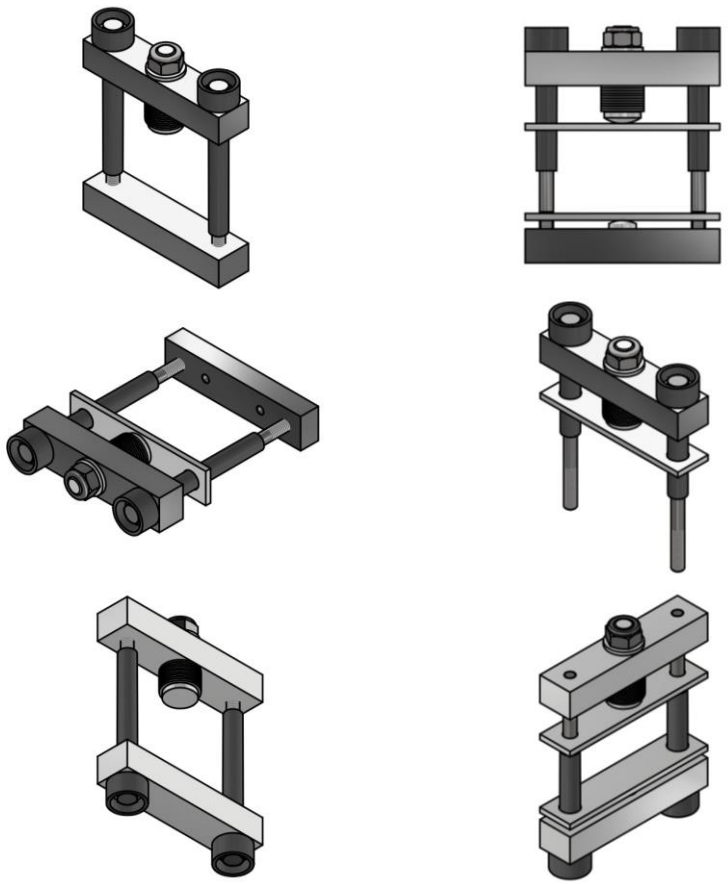

Other subcategories:

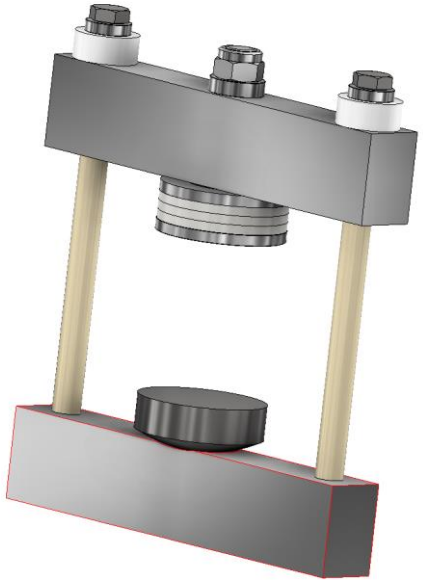

- Bar Clamp for High Peak Currents($I_{Pk} \geq 10000$ A)
- Almost Non-Magnetic Bar Clamps
- Low-mass Bar Clamp
- Bar Clamp for high T applications
- Clamp bar with passivated surfaces

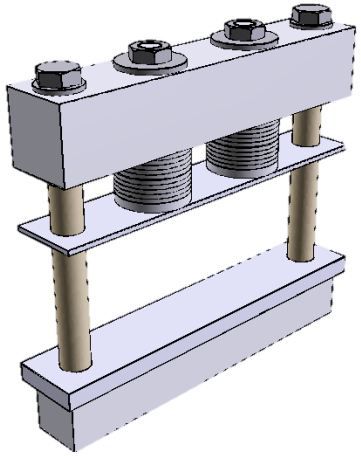

New Bar Clamp for Medium Voltage (VLinea ≥ 1000 VRMS)

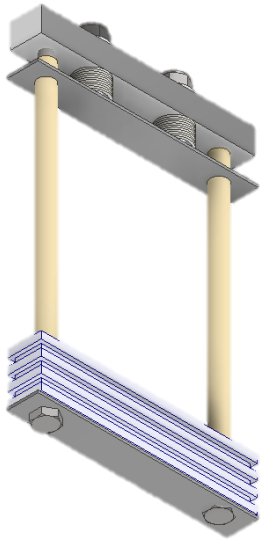

VLinea = 1000 VRMS

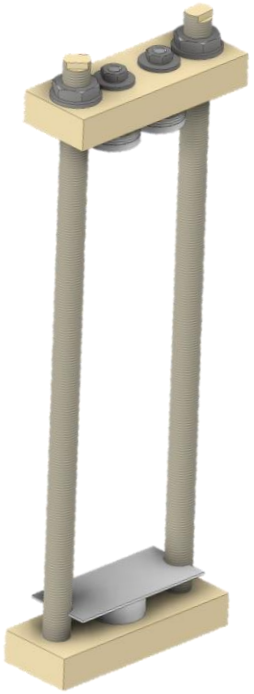

VLinea = 1200 VRMS

VLinea = 1200 VRMS

Our Products

Semiconductors

High power semiconductors devices
Rectifying diodes
Welding diodes
Fast recovery diodes
Phase control SCR's
Fast switching SCR's

Gps Easy Modules

GEM module family (Dual, Quad, Hexa, and Octal) brings to the high power applications the same compactness, ease of use and scalability of the lower power semiconductor modules.

High power modules

TEC single, dual, triple e quad SCR modules
TEB SCR modules for regen and non-regen motor drives
DEB diode modules for regen and non-regen motor drives
Field Power Supply modules (three and single phase)
Line overvoltage filters

Privacy & Cookies Policy

BOX CLAMP

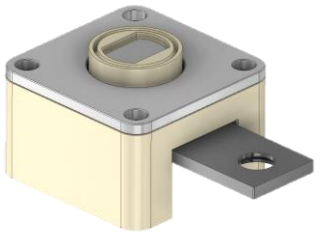

Box Clamps for press-pack disc devices are only used for systems with single-sided cooling.

Green Power Solutions offers today the widest range of Box Clamps available on the market.

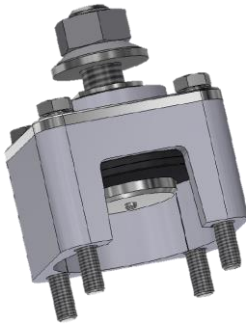

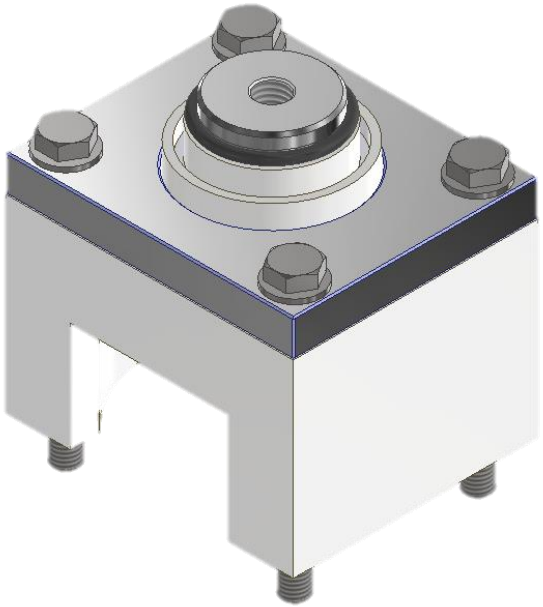

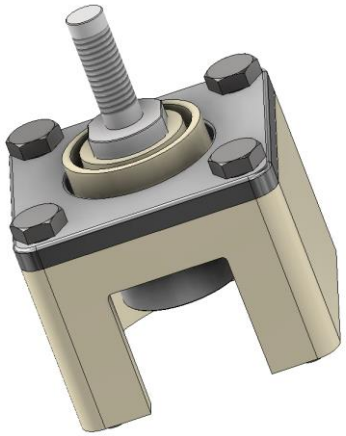

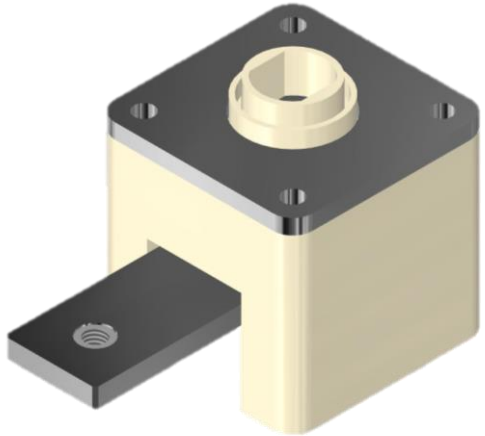

BOX CLAMP

- **Standard Inner Diameters[mm]:**
  42+, 52, 59, 80
- **Compressive forces from 4 kN to 24 kN**
- **Working temperatures up to 170°C**

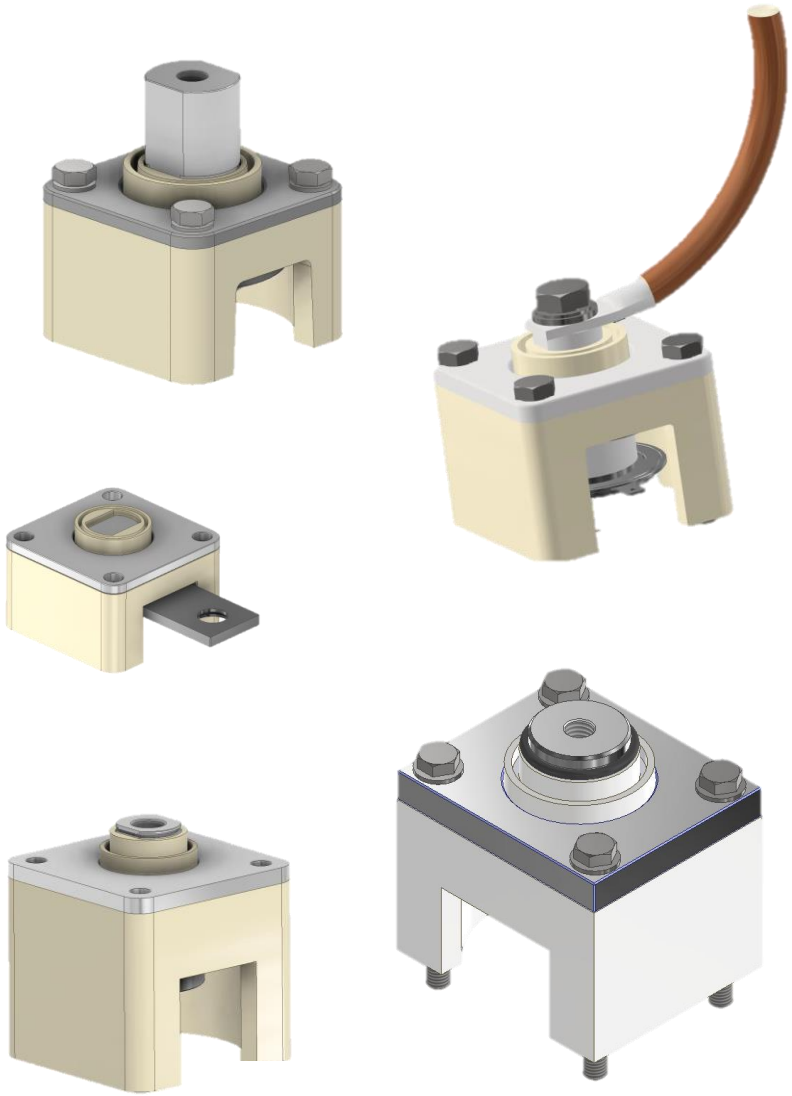

RECENT DEVELOPMENTS:

- Copper Free Box Clamp
- No-Drop design
- Secure mounting and disassembly systems
- Extension of product ranges
- Accessories

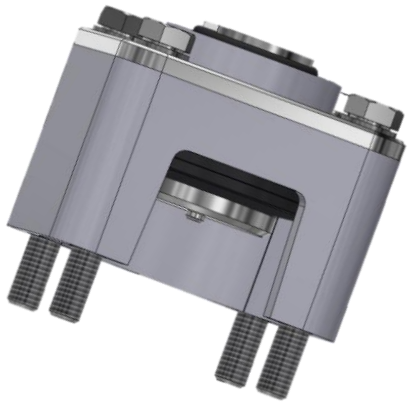

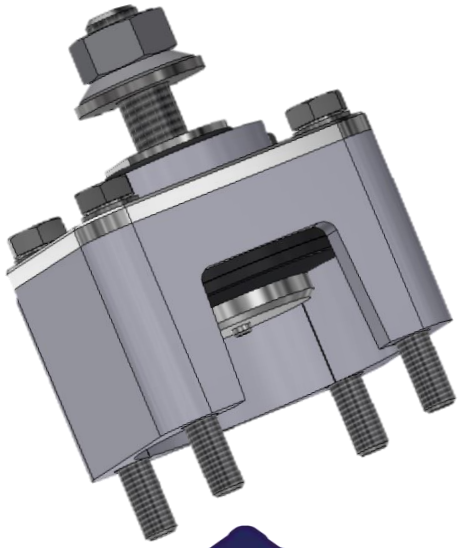

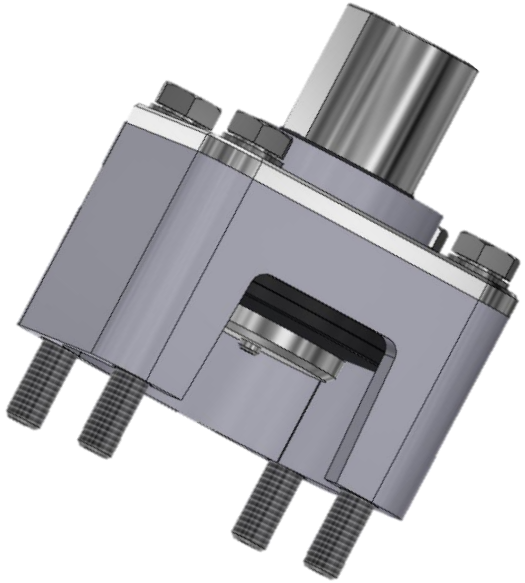

ASSEMBLY / DISASSEMBLY SEQUENCE:

Strumenti:

- **BOX CLAMP**
- **SPIDER**
- **SPACERS**
- **FLAT STRIKE SURFACE**

NEVER USE A TORQUE WRENCH!

Special Applications of Box Clamp

- STUD BOX DIOD
- STUD BOX SCR

Thank you for your attention!!